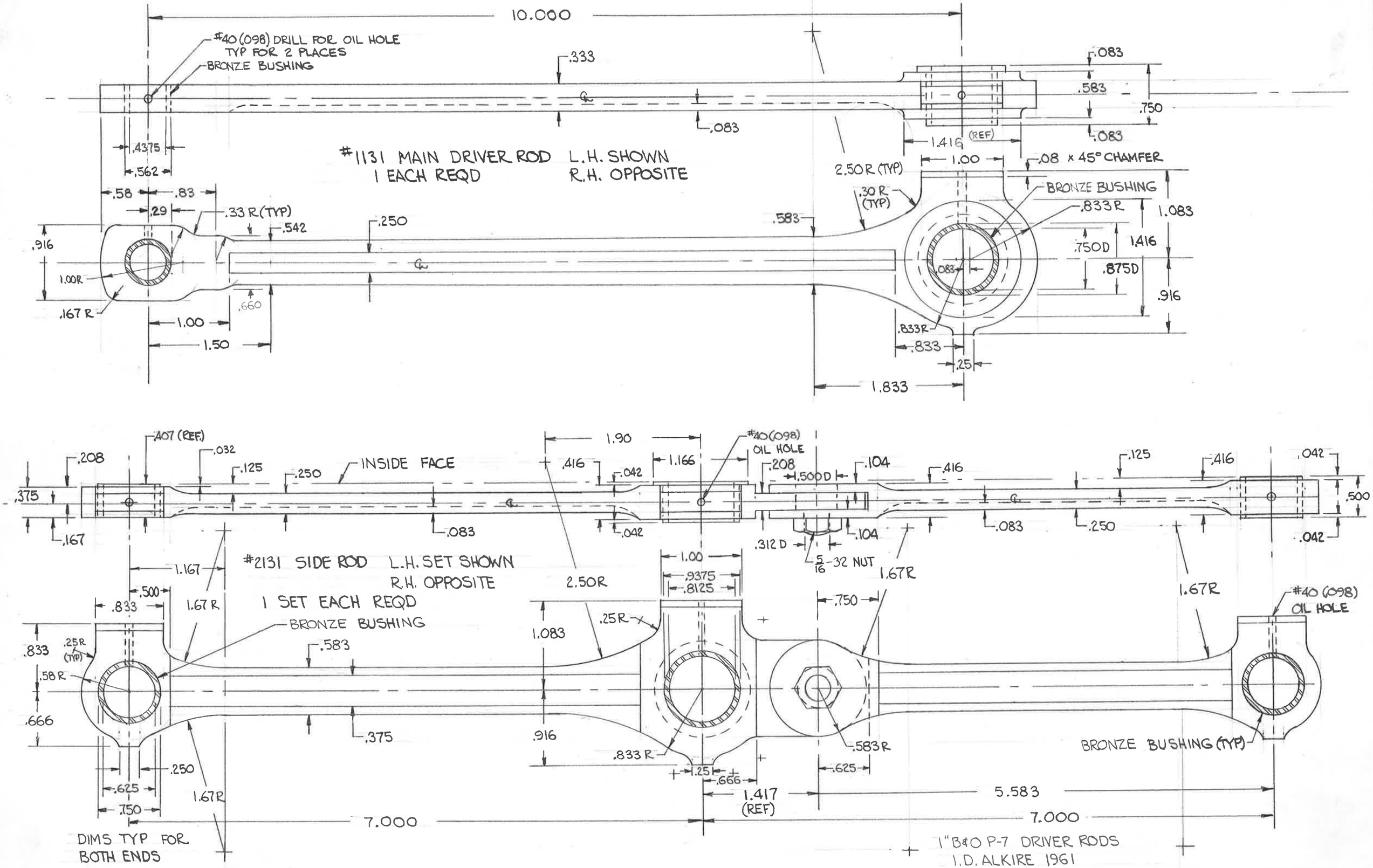
10.000
#40 (.098) DRILL FOR OIL HOLE
TYP FOR 2 PLACES
BRONZE BUSHING
.333
.083
.583
.750
.083
.083
.4375
.562
#1131 MAIN DRIVER ROD L.H. SHOWN
1 EACH REQD R.H. OPPOSITE
1.416 (REF)
1.00
.08 x 45° CHAMFER
2.50 R (TYP)
.30 R (TYP)
BRONZE BUSHING
.833 R
1.083
.58
.83
.29
.33 R (TYP)
.542
.250
.583
.750 D
1.416
.916
1.00 R
.875 D
.083
.916
.167 R
.660
1.00
1.50
.833 R
.833
.25
1.833
.407 (REF)
.032
.208
.125
.250
INSIDE FACE
1.90
.416
.042
1.166
#40 (.098) OIL HOLE
.208
1.500 D
.104
.416
.125
.416
.042
.375
.500
.167
.083
.042
.312 D
.104
.083
.250
.042
1.167
#2131 SIDE ROD L.H. SET SHOWN
R.H. OPPOSITE
1 SET EACH REQD
2.50 R
1.00
.9375
.8125
1.67 R
1.67 R
.500
.833
1.67 R
BRONZE BUSHING
.750
#40 (.098) OIL HOLE
.833
.25 R (TYP)
.583
1.083
.25 R
.58 R
.666
.375
.916
.833 R
.583 R
BRONZE BUSHING (TYP)
.250
.625
.750
1.67 R
.25
.666
.625
1.417 (REF)
5.583
7.000
7.000
DIMS TYP FOR BOTH ENDS
1" B&O P-7 DRIVER RODS
I.D. ALKIRE 1961