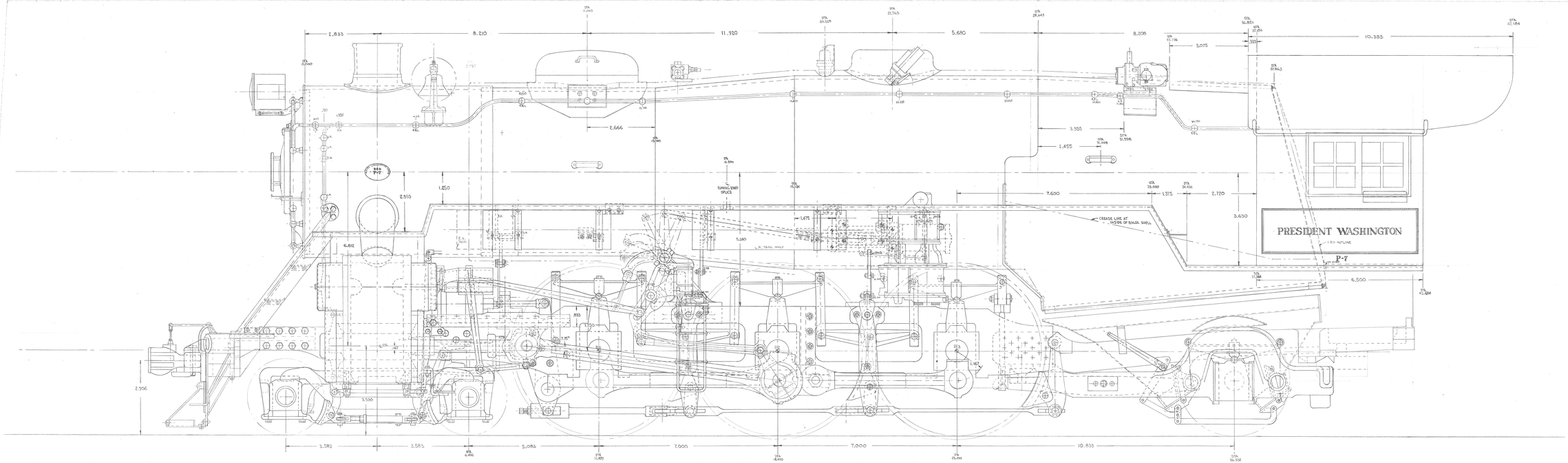

1st B&O P-7
I.D. ALLIRE 1960