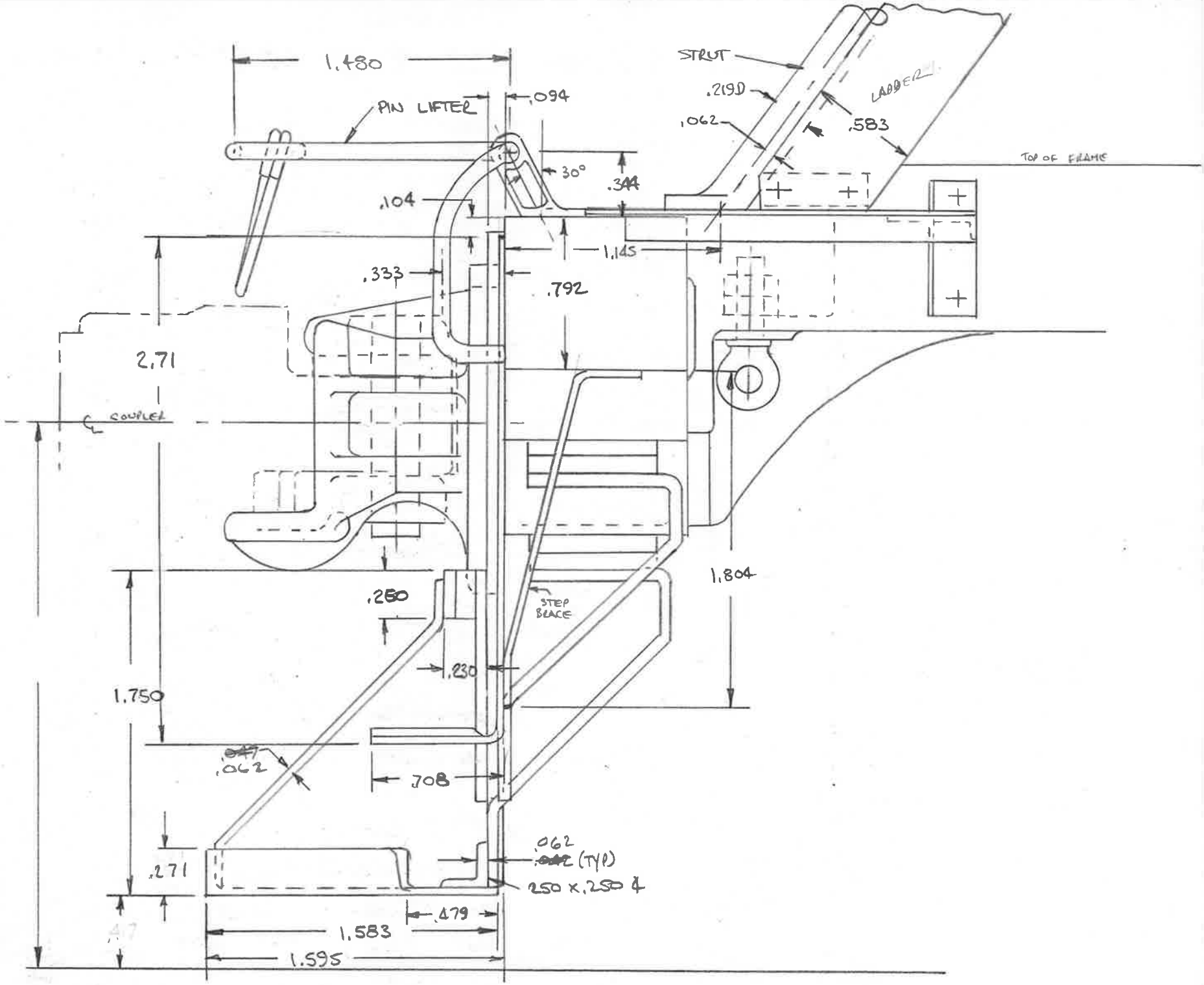
1.480
PIN LIFTER
.094
STRUT
.219D
.062
LADDER
.583
TOP OF FRAME
30°
.344
.104
1.145
.333
.792
2.71
COUPLER
1.804
.250
STEP BRACE
.230
1.750
.062
.708
.062
(TYP)
.271
.250 x .250 ∡
.479
1.583
1.595

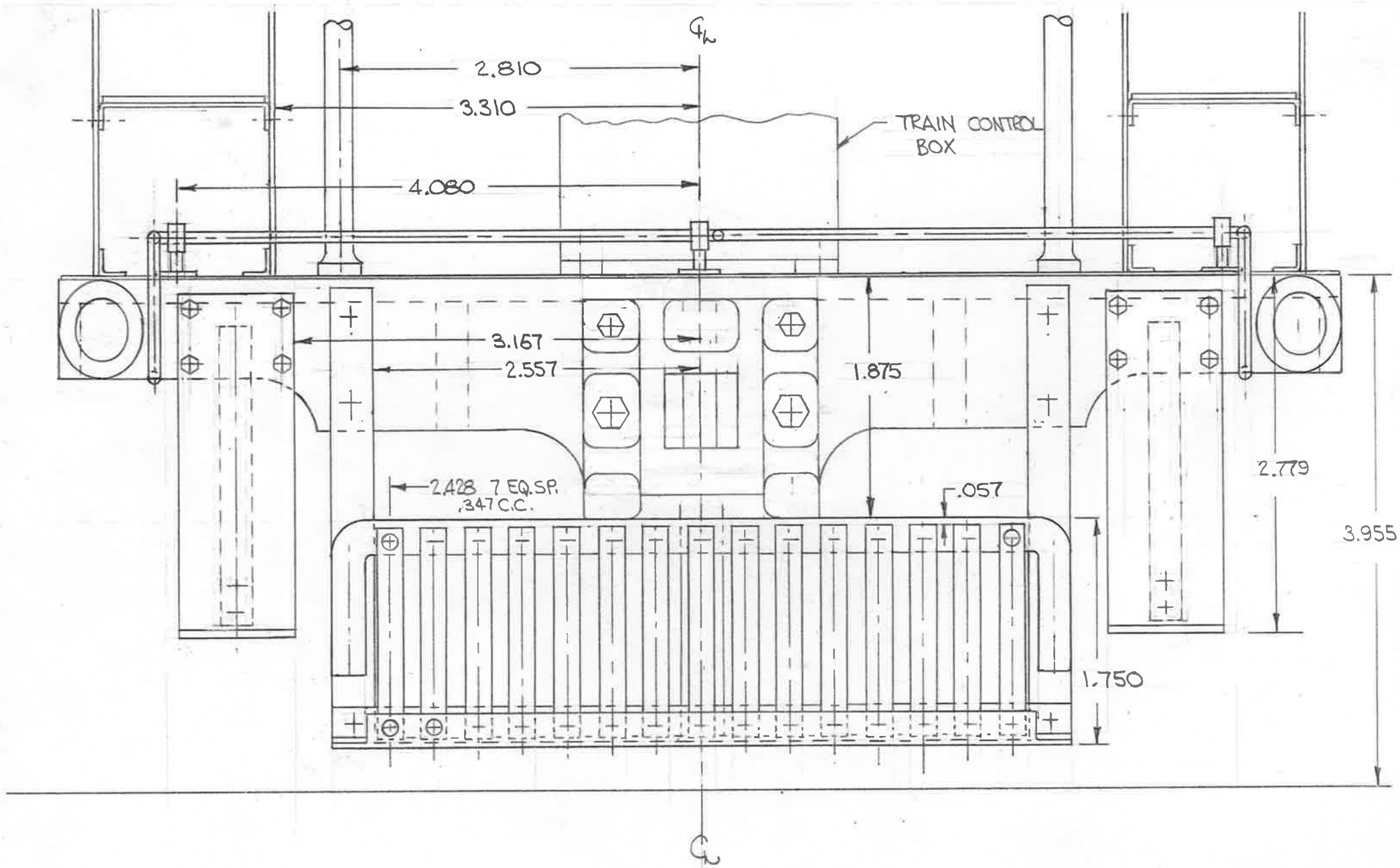
℄
2.810
3.310
4.080
TRAIN CONTROL BOX
3.167
2.557
1.875
2.428 7 EQ.SP.
.347 C.C.
.057
2.779
3.955
1.750
℄

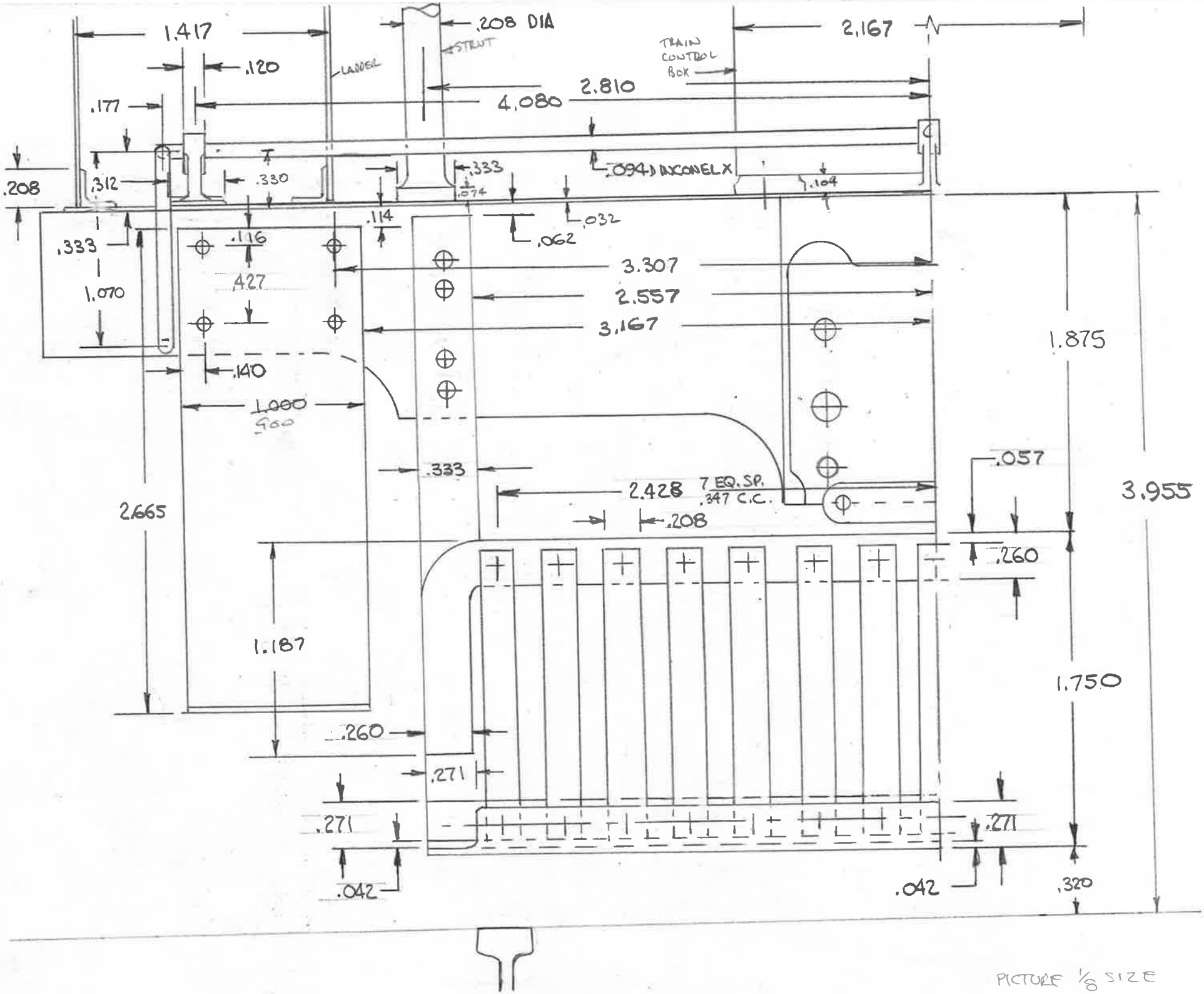

PICTURE 1/8 SIZE
DIM'S 1/12 SIZE.