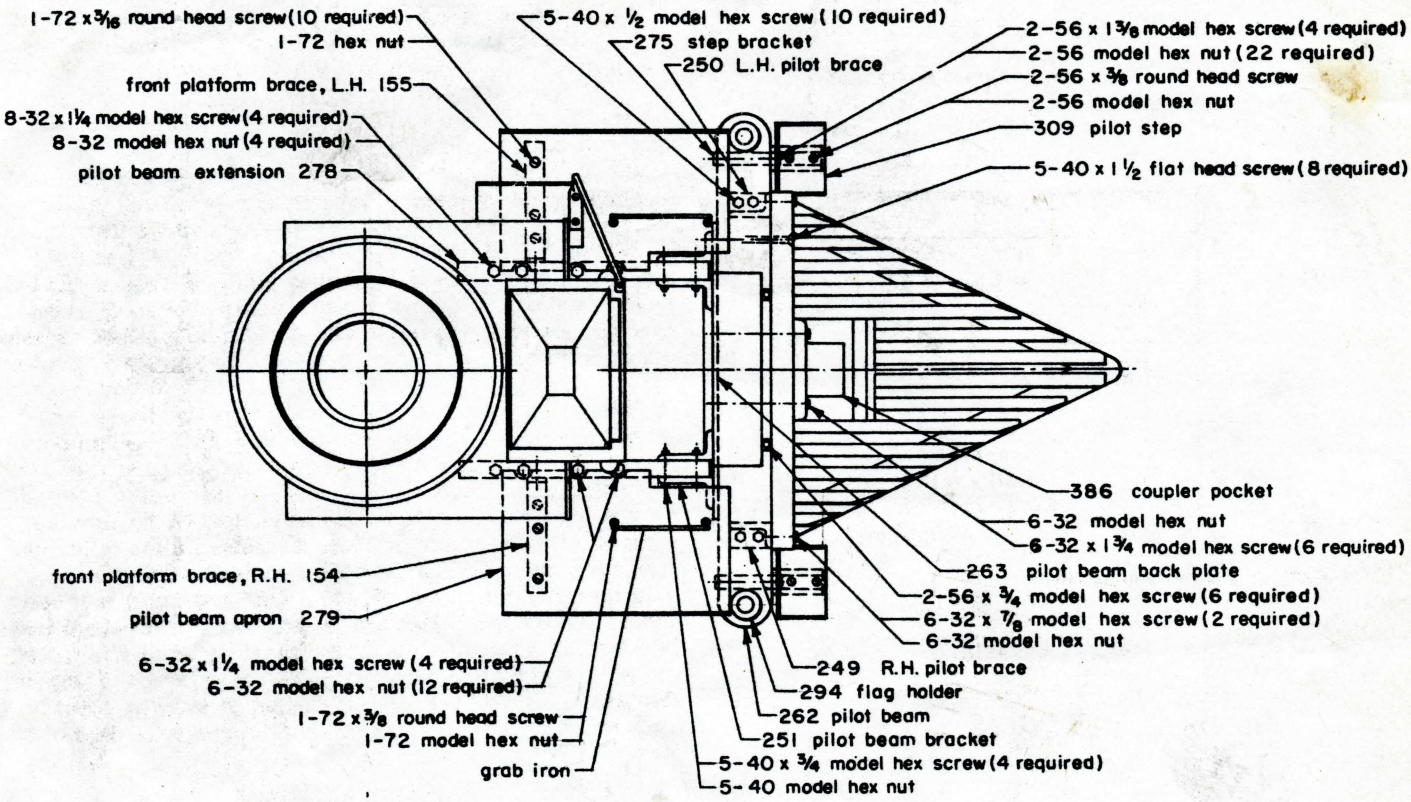
1-72 x 3/16 round head screw (10 required)
1-72 hex nut
front platform brace, L.H. 155
8-32 x 1 1/4 model hex screw (4 required)
8-32 model hex nut (4 required)
pilot beam extension 278
5-40 x 1/2 model hex screw (10 required)
275 step bracket
250 L.H. pilot brace
2-56 x 1 3/8 model hex screw (4 required)
2-56 model hex nut (22 required)
2-56 x 3/8 round head screw
2-56 model hex nut
309 pilot step
5-40 x 1 1/2 flat head screw (8 required)
386 coupler pocket
6-32 model hex nut
6-32 x 1 3/4 model hex screw (6 required)
263 pilot beam back plate
2-56 x 3/4 model hex screw (6 required)
6-32 x 7/8 model hex screw (2 required)
6-32 model hex nut
249 R.H. pilot brace
294 flag holder
262 pilot beam
251 pilot beam bracket
5-40 x 3/4 model hex screw (4 required)
5-40 model hex nut
front platform brace, R.H. 154
pilot beam apron 279
6-32 x 1 1/4 model hex screw (4 required)
6-32 model hex nut (12 required)
1-72 x 3/8 round head screw
1-72 model hex nut
grab iron

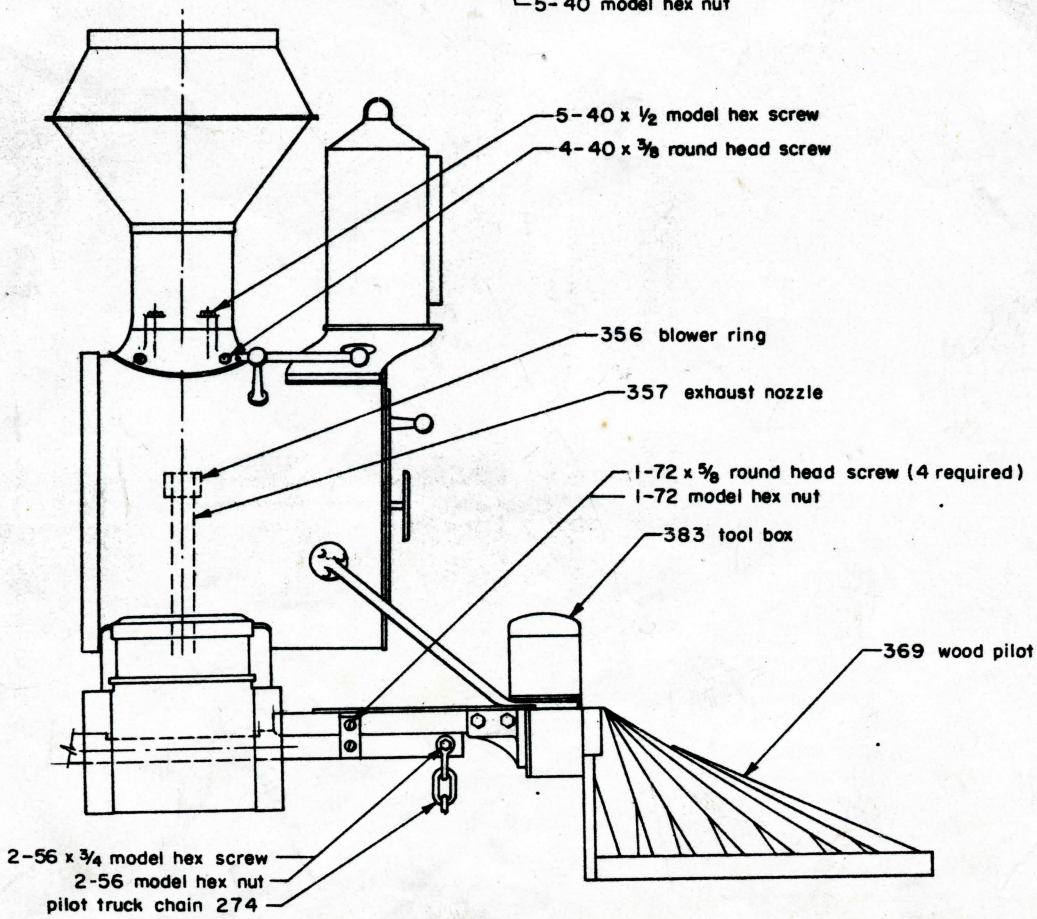
5-40 x 1/2 model hex screw
4-40 x 3/8 round head screw
356 blower ring
357 exhaust nozzle
1-72 x 5/8 round head screw (4 required)
1-72 model hex nut
383 tool box
369 wood pilot
2-56 x 3/4 model hex screw
2-56 model hex nut
pilot truck chain 274