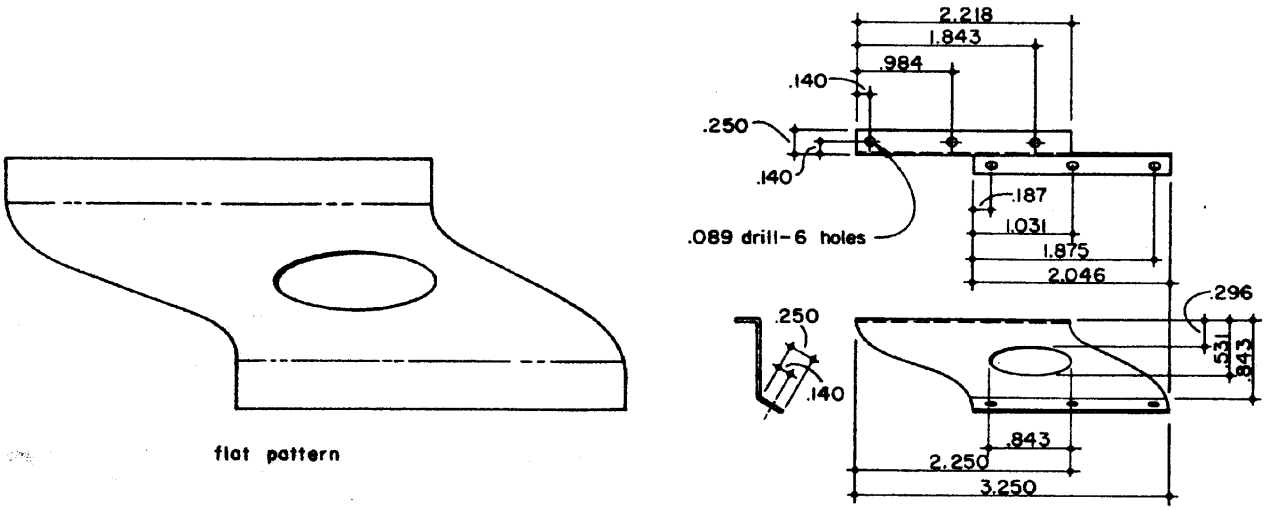

300/301 HEADLIGHT MOUNTING BRACKET
Cold Rolled Steel
2 Required: (1 as shown – 1 opposite)

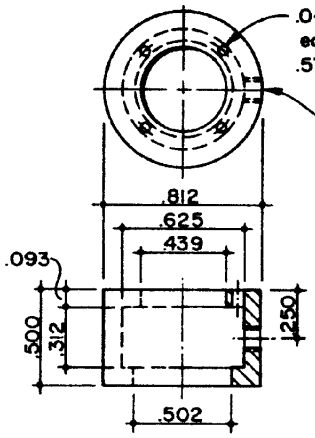

356 BLOWER RING
Brass
1 Required

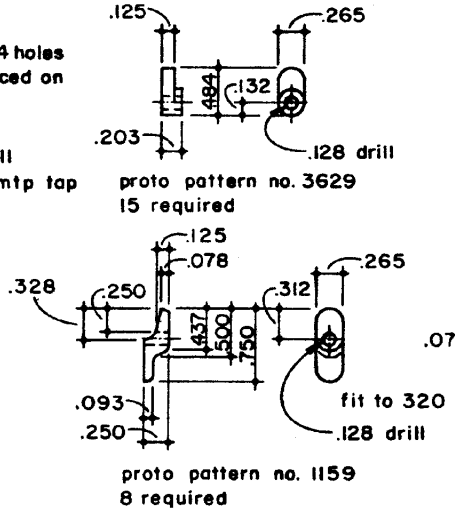

228 SMOKEBOX DOG
Cold Rolled Steel

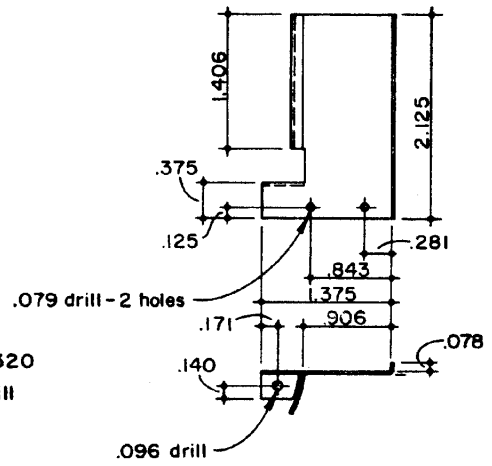

355 SMOKEBOX STEP
Cold Rolled Steel
1 Required

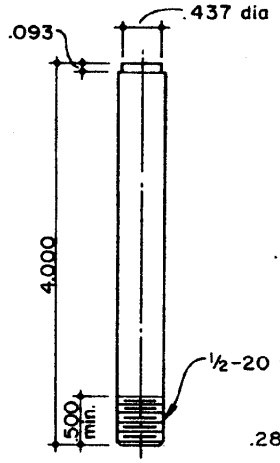

357 EXHAUST NOZZLE
Brass Tubing
(.500 o.d. x .375 i.d.)

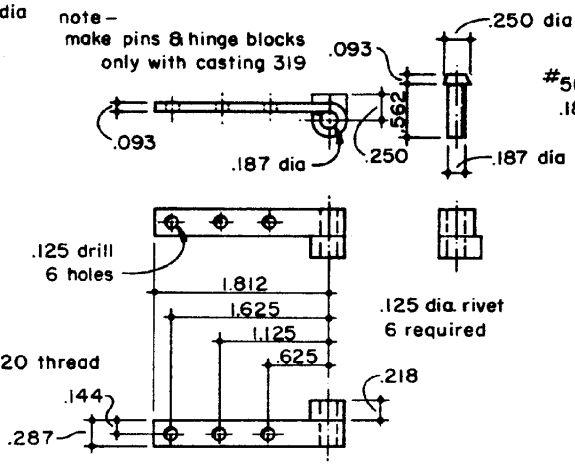

227 SMOKEBOX HINGE
Cold Rolled Steel

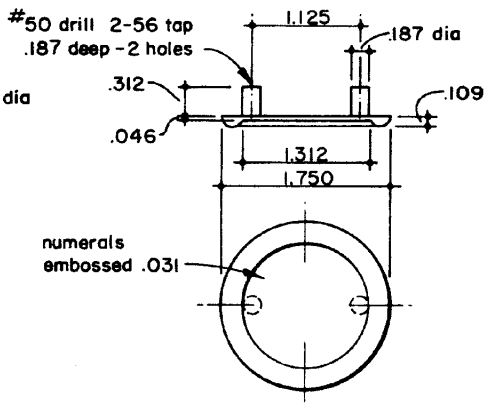

221 NUMBER PLATE
Brass
1 Required