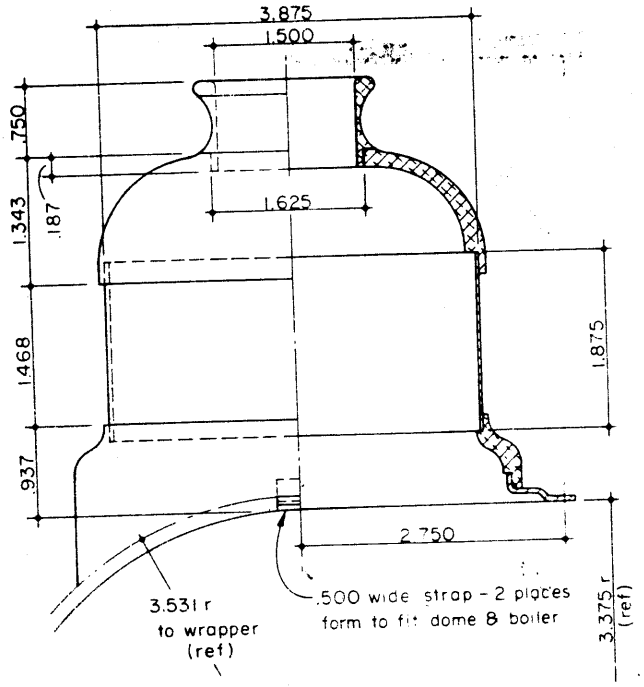

225 STEAM DOME COVER
2 Aluminum Castings & .030 Brass
1 Required

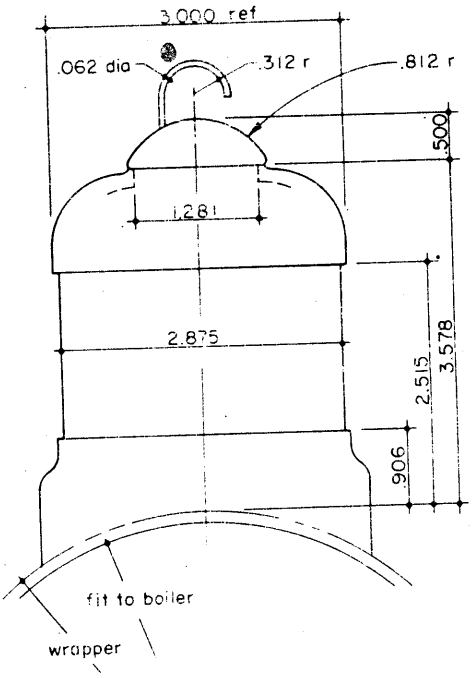

346 SAND DOME
2 Aluminum Castings & .030 Brass
1 Required

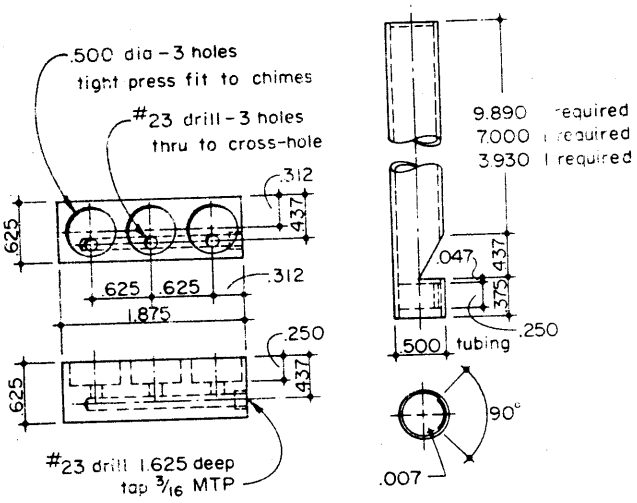

317 PROTOTYPE CHIME WHISTLE
Brass
1 Required

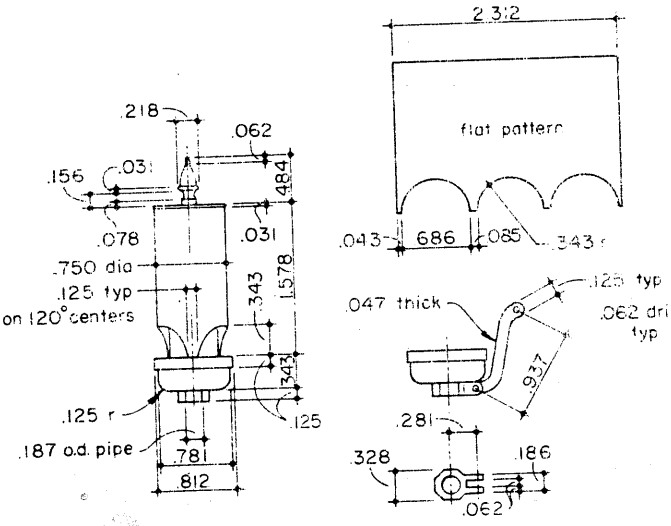

226 WHISTLE
Brass
1 Required

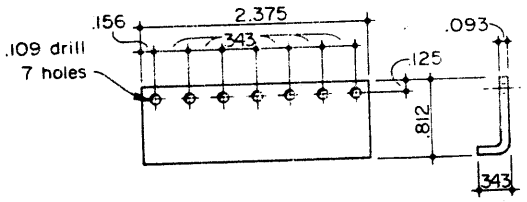

122 FOOT PLATE SUPPORT
Cold Rolled Steel
1 Required

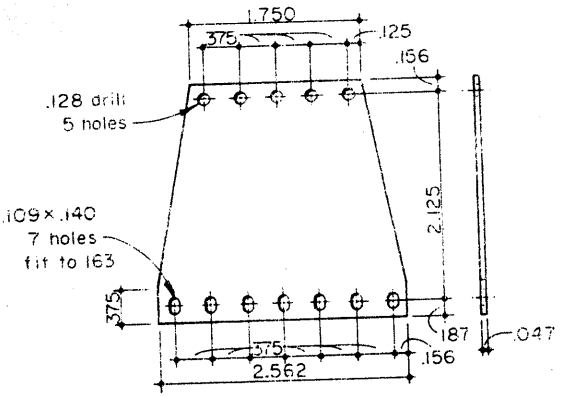

121 FRONT FIREBOX SUPPORT
Cold Rolled Steel - 1 Required