Erecting the boiler

Attaching the smoke box to the boiler

In this installment of the article, LB first talks about installing the smoke box to the boiler with a brass ring. In it, he describes that the smoke box on the smaller boiler is ¼ inch in diameter smaller than the boiler barrel, which mine is. The O.D. of the smoke box is 3.5 inch and the O.D. of the boiler barrel is 3.75 inch. The smoke box fits inside the boiler barrel; the difference between the two diameters is reduced further by a brass ring that fits inside the boiler barrel, the smoke box then fits inside the brass ring. These three items fit quite well together, but when I looked at the cross section view, I found interference between the inner ring of the smoke box barrel and the outer diameter of gland fitting #2 that is used for the Super heater.

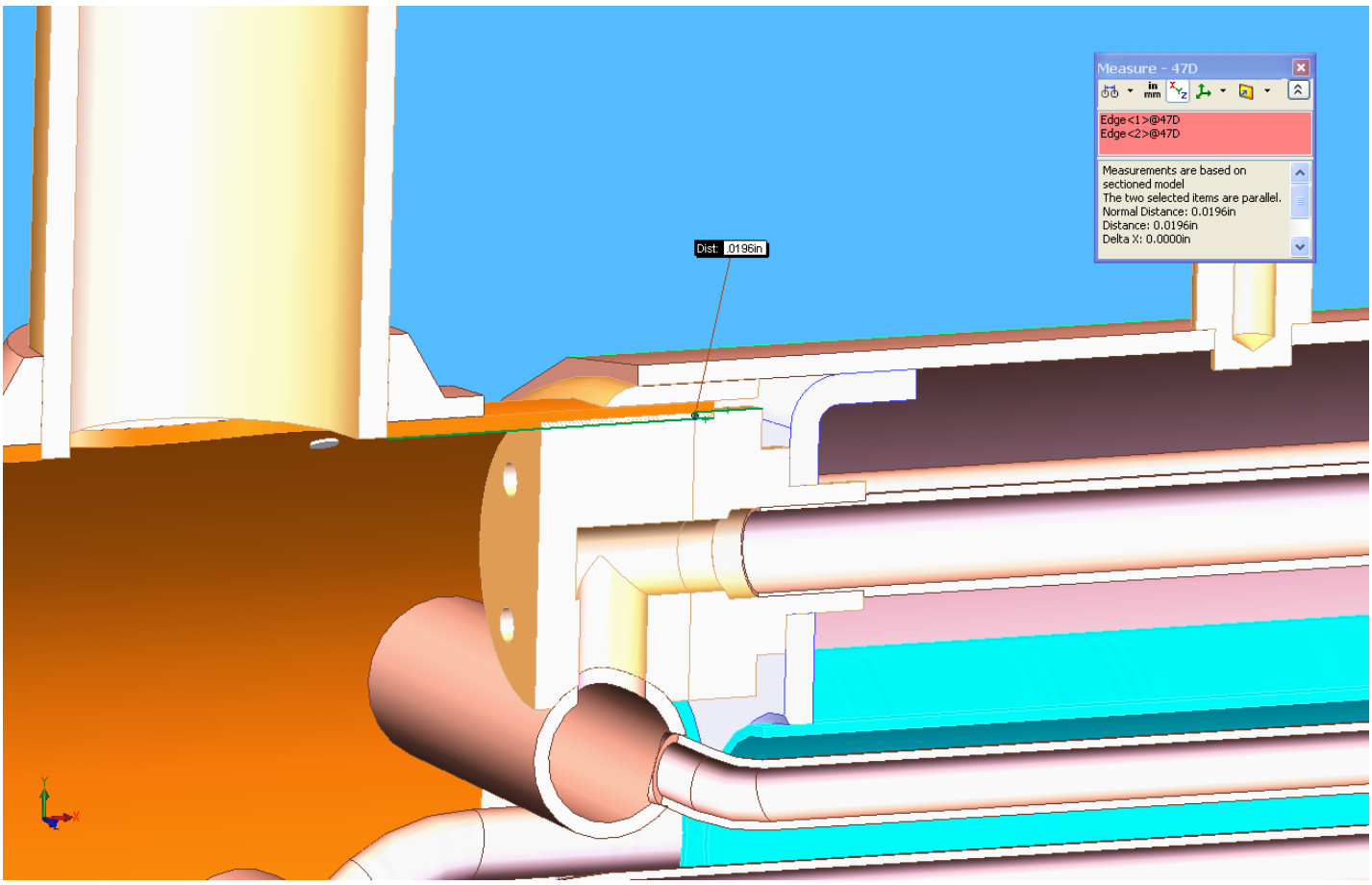

Figure 1: A .0196 interference shown between the smoke box barrel and Gland #2 for the super heater, green line shows interference.

A little less than 1/32 of an inch of interference but one that I am sure would give a builder a bit of a problem when trying to attach the two entities. There are a few options to consider depending on of course what stage the builder is in at the time of this reading, so I will let them decide what to do. For me I think my best option is to make a flat spot on the top of gland fitting # 2 that will allow a 1/32 of an inch or so space between the parts.

While making the flat spot for the clearance issue on gland fitting #2, I also had to make a flat spot on the adjoining piece that attaches to the back head, as there was an interference issue there too. Figure 2 shows the resolved clearance issue.

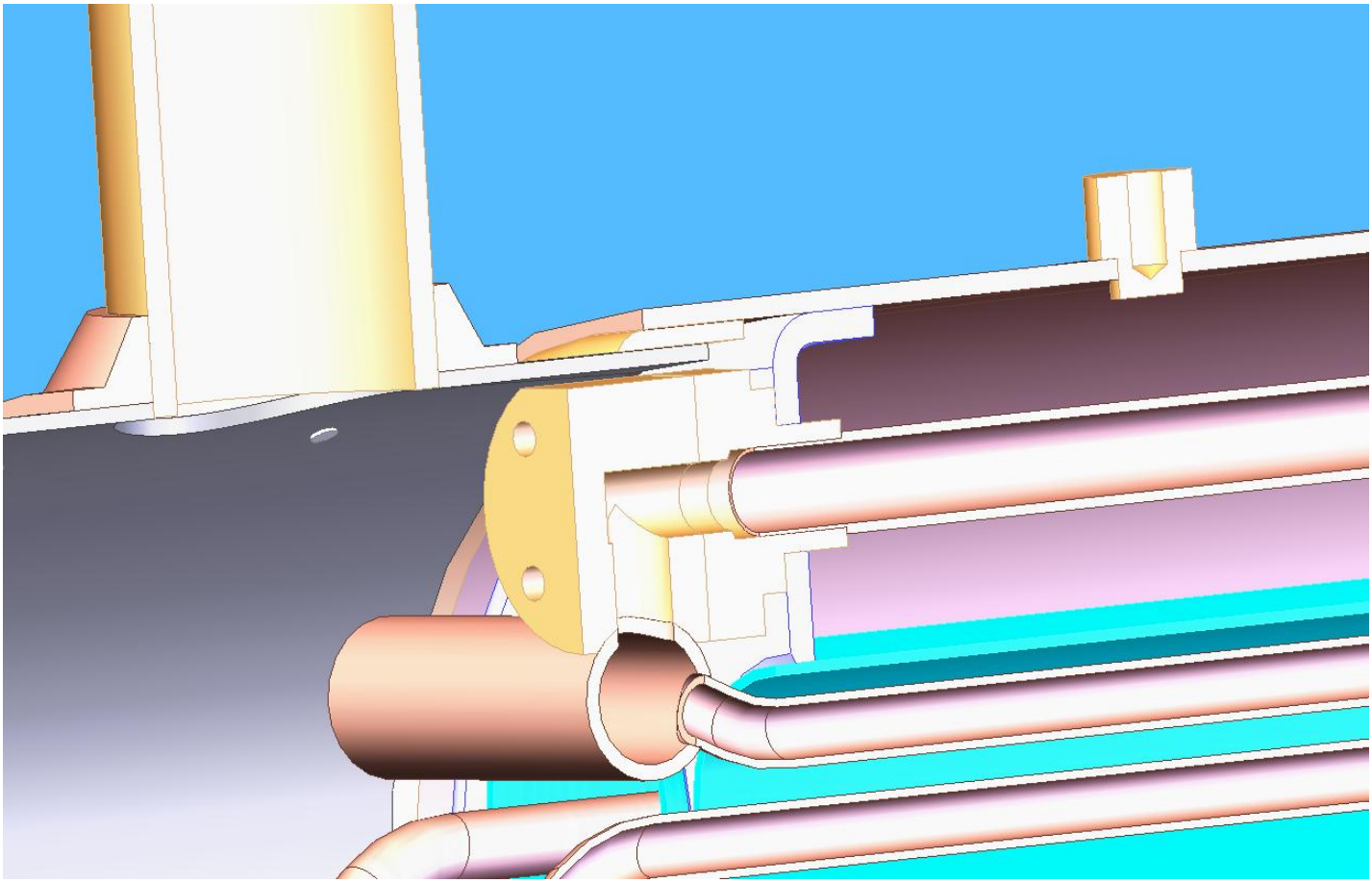

Figure 2: Resolved clearance issue between the Gland fitting #2 and the inner smoke box.

The next item to tackle was the attachment of the smoke box saddle to the frame, which I had already done. The only thing left to do was to insert the four mounting holes in the saddle as well as to the smoke box barrel.

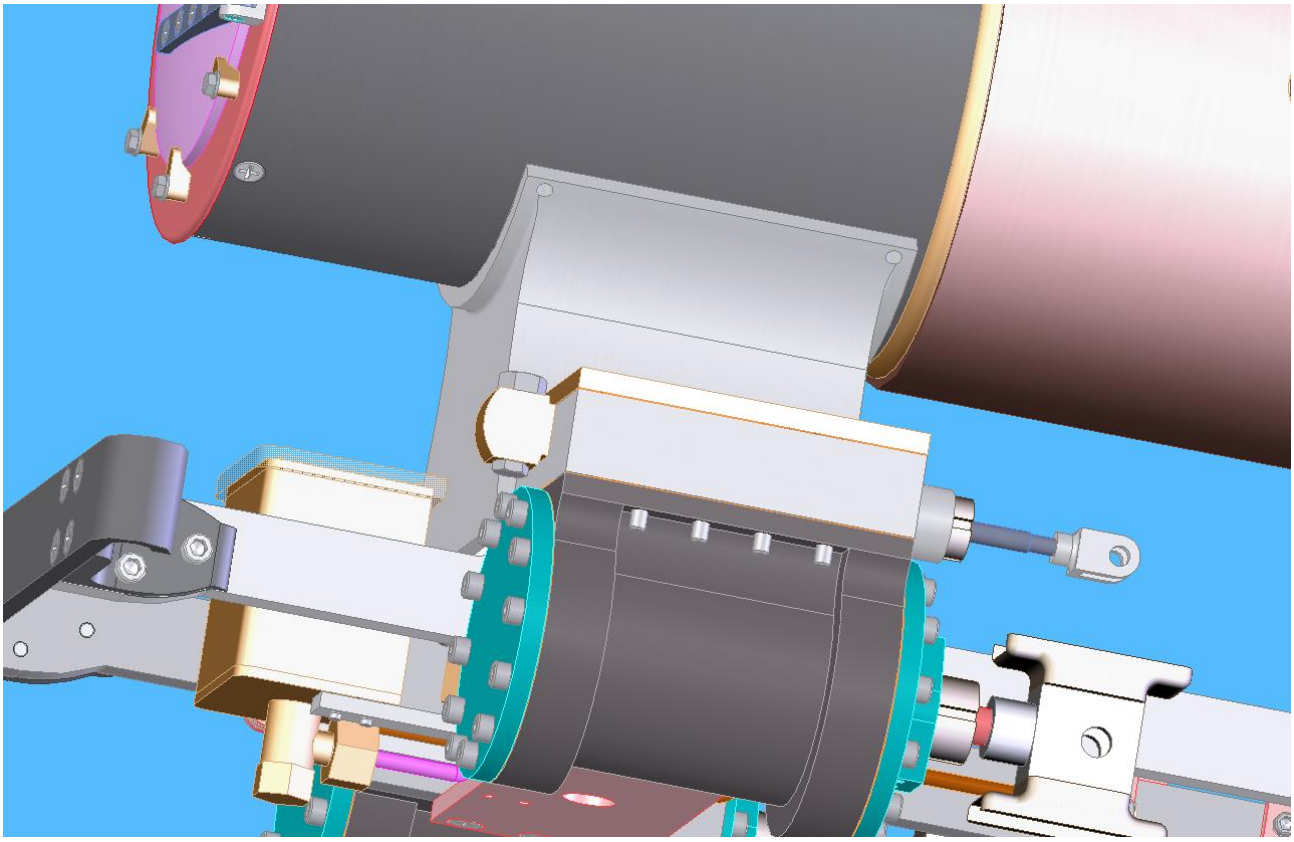

Figure 3: Mounting holes in the saddle for the attachment of the smoke box.

Issues with the Boiler Blow-Down Valve

VIRGINIA

Continued from 20 December 1956, pages 878—880

By L.B.S.C.

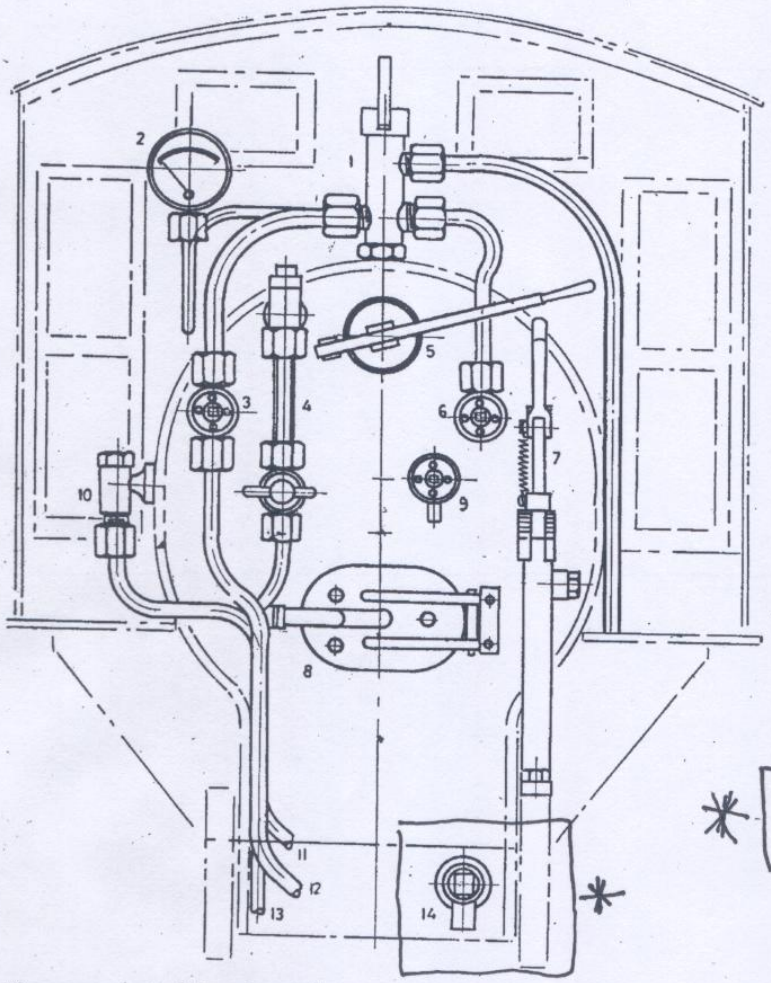

The arrangement of the cab and fittings

1. Whistle valve and steam turret.
2. Steam gauge.
3. Injector steam valve.
4. Water gauge.
5. Throttle lever.
6. Blower valve.
7. Reversing lever.
8. Firehole door.
9. Water-level test valve.
10. Check valve for hand-pump feed.
11. Water-gauge blowdown (open pipe).
12. Steam pipe to injector.
13. Water pipe from hand-pump tender union.
14. Boiler blowdown valve. *

THE wooden cabs in vogue on American locomotives when *Virginia* was a young girl resembled in one respect the legendary cupboard of Old Mother Hubbard inasmuch as they were rather bare.

There was the big Johnson bar on the right-hand side, the throttle lever across the backhead and a big firehole door of the universal oven type usually operated by a chain. The only other backhead adornments were a little water-gauge on the left and three small try-cocks of the screwdown type in a bunch on the right, with a cast-iron cup underneath to catch the drips, which were led away underneath the cab deck by a small pipe. A small steam gauge was usually situated on top of the wrapper close to the backhead and a chain across the inside of the cab roof was connected to the whistle valve.

Very few locomotives had injectors, or even blowers, and the water-valve controlling the pump feed was usually on the tender. The handles controlling cylinder drain cocks and ash-pan dampers—and a lever for operating the rocking grate, when one was provided—usually protruded through the cab deck.

As you will see from the drawing the cab of our little engine is better furnished, but I have tried to retain the old-fashioned look. "Massa Johnson" is present, and the long inclined throttle lever, the "oven door," the water gauge and one try-cock keep him company, as they did in full size; but there are newcomers in the shape of an injector steam valve, blower valve, and a combined whistle valve and steam turret (also known as a fountain or manifold) to which the steam connections and the pressure-gauge syphon are attached. There is also a check valve to take the feed from the emergency hand pump which will be fitted in the tender. A boiler blowdown valve will also be required, and this goes below the cab deck, being located just above the mud-ring at the side of the firebox. *

The cab itself would have seemed strange to British enginemen of the period. Apart from the two rectangular windows above the boiler there were two front doors leading out on to the running board, with windows in the upper panels. The "hogger," otherwise the driver, or engineer as he is called in America, and the "tallowpot" or "ashcat," alias the fireman, worked at different levels in a literal sense. The driver had a seatbox perched up at running-board level close to the right-hand side of the cab, from which he could operate the throttle and reverse lever and, later, the Westinghouse brake valve.

* PERTAINS TO BLOWDOWN VALVE,

Figure 4: Asterisked areas pertaining to blow-down valve.

I had an issue with the Boiler blown-down valve; I had originally put the valve as it appears in the above picture (figure 4) on the back-head right above the mud ring, but after looking at my model, I came to the realization that the valve would be protruding right into the rear most axle, not a good thing. After finding the page that describes the blow-down valve, I discovered that the words on the page say it goes at the side of the firebox; this is what I get for not reading. “A picture is worth a thousand words, but only if the picture is correct” or drawing in this case.

After moving the blow-down valve to the side of the firebox I began to wonder if the valve would interfere with the coupling rods for the rear wheels and sure enough the is an issue there. From the outside of the frame to the tip of the valve, I got a measurement of .8586 inches (figure 5).

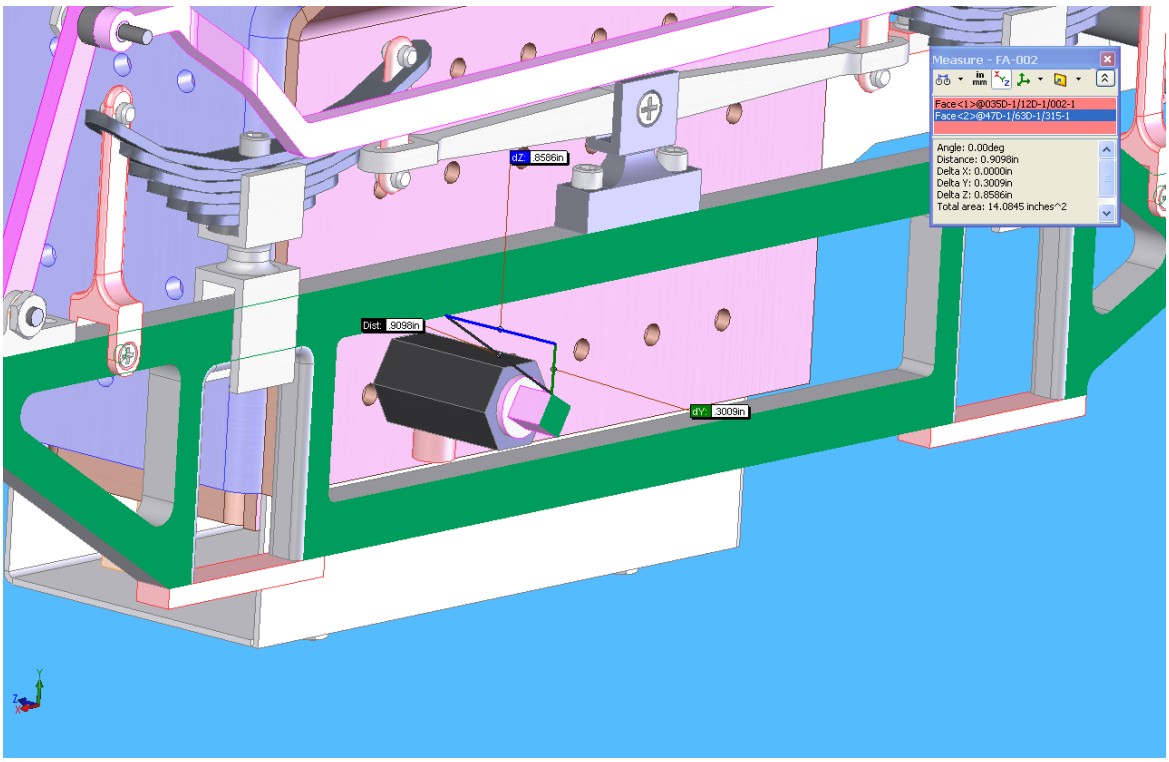

Figure 5: Measurement of the end of the valve to the outside of the frame.

Unfortunately I have been having big memory issues with some of my assemblies, I did however manage to find an assembly from which I could get some basic measurements from and go from there. Figure 6 shows an older assembly I created and the measurement I took there is from where the wheel coupling will lie on the wheel in relation to the outside of the frame. The measurement would represent the inner most part of the wheel coupling to the outside of the frame. I got a measurement of .5625 inches; this means a potential interference with the valve of .8586-.5625 = .2961 inches.
I will have to make the length of the valve at least .375 inches shorter, real world, you may want to go more or perhaps move the valve to a better location. Unfortunately, at this time I do not have a model I can play with to demonstrate the interference or a potentially better location because of memory issues, my assemblies are getting to big for my old computer to handle.

Figure 7 shows the adjusted length valve; I now have a distance of .5625 - .4836 = .0789 inches. A little over a 1/16 of an inch, I would imagine the axel is going to have a bit of travel from side to side as well. I am not thrilled with just a bit over a 1/16 of an inch of clearance between the end of the valve and the wheel coupling, not to mention the thermal expansion of the boiler as well.

Instead of having the end of the plug squared, I think I will opt for an indented hex socket in the valve plug, this option will give me ¼ inch more clearance than does the squared end. Figure 8 shows the redesigned plug.

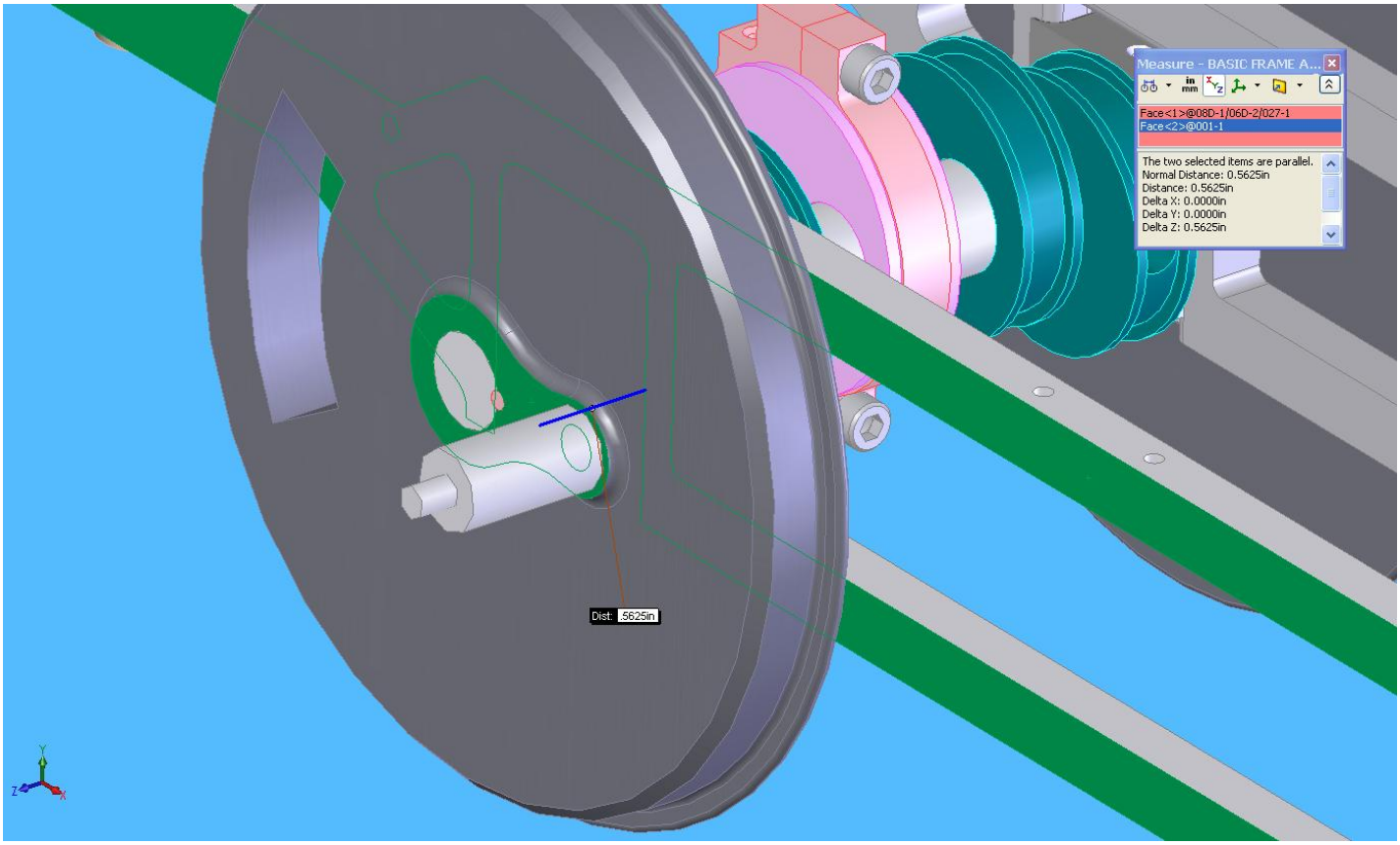

Figure 6: Measurement of gap distance between the wheel coupling and outside of the frame, (blue line represents the horizontal distance from green surface of the frame to the green surface of the wheel.

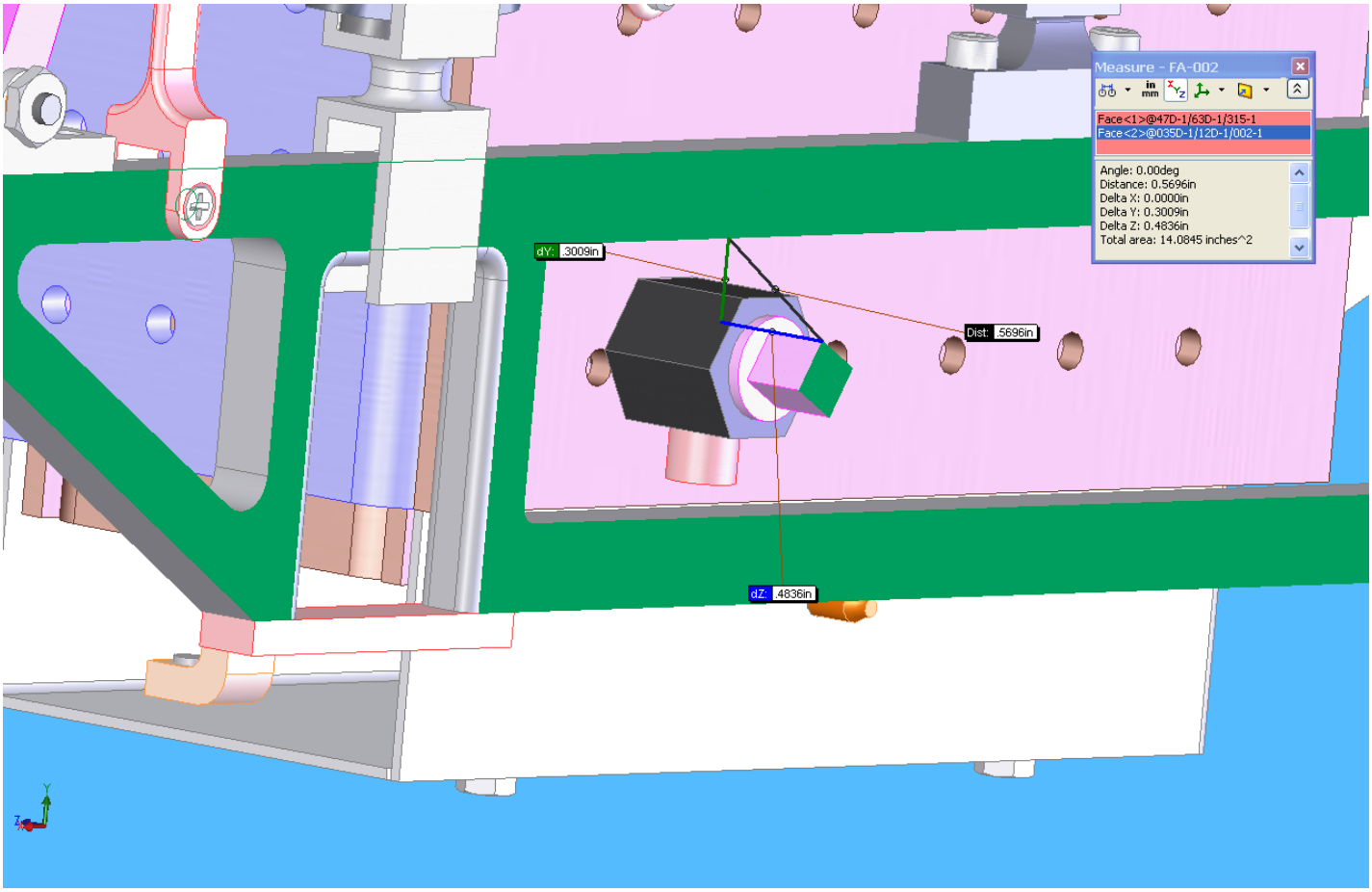

Figure 7: Gap distance between outside of frame and end of valve.

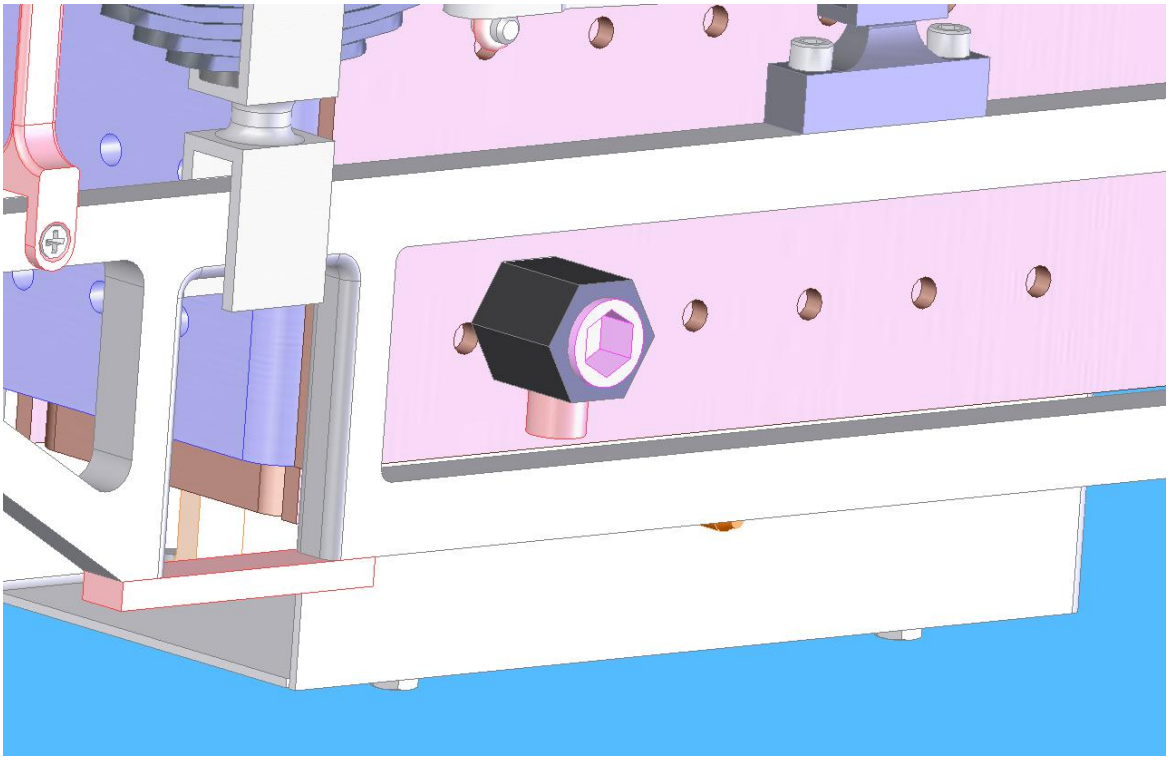

Figure 8: Redesigned plug with a socket instead of a squared end.

<u>Boiler Expansion/Anti Lifting Brackets.</u>

The boiler expansion/anti-lifting brackets are the next item to address here and after reading the article about them twice this time and looking at the drawing he has for them, I cannot find any mention of a distance between the two brackets ends that allows for this expansion. He may have said something about this prior in his article but I cannot remember if he did or did not. In figure 9, there is a drawing at the bottom right hand corner and as far as I can tell, the top bracket that attaches to the frame does have a space between the end of the bracket and the bracket that is attached to firebox. The lower bracket that is attached to the firebox and goes to the bracket that is attached to the frame however does not have this gap. The callouts I believe are for the screws that are used to attach the brackets, either a 3/32 or a 3-48 round head machine screw.

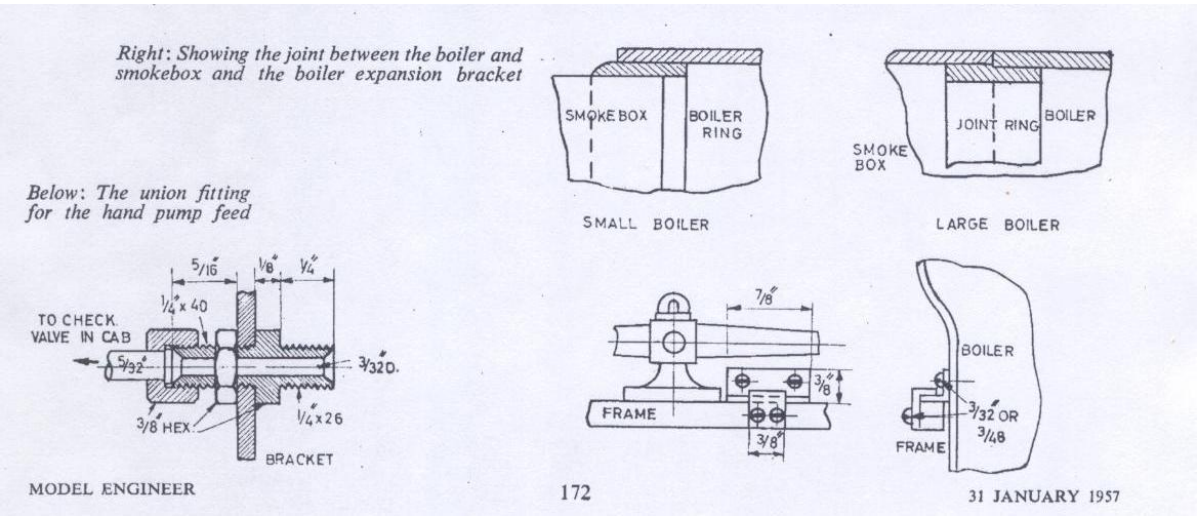

Figure 9: Anti-lifting brackets, lower right hand corner.

I am sure there should be a gap at both ends of this anti-lifting/ expansion device otherwise; the bottom bracket will impede the expansion of the boiler at that point. Looking back at the stress analysis I did earlier on the boiler I found we had a .000416-inch displacement, but this displacement was only due to the pressure and it was at a maximum pressure of 160 psi, there is also thermal expansion to consider. This will not be that much; in fact, I do not think it will be as great as the displacement distance. After doing a quick and dirty linear thermal expansion calculation where Delta L = Alfa * L * Delta T I get about half of what the displacement was, I got .0002406 inches. Consider as well that the bracket is attached to the boiler, that bracket will expand too. Not only that but, it could potentially cause the bracket to which it rests on to expand as well. There are three types of heat transfer to consider, conduction, convection and radiation. I believe we have all three.

Combining these two answers and multiplying the last by two because we have two brackets per side we get; .000416 + 2*.0002406 = .0008972 inches for the expansion. Off the top of my head, I was thinking about a gap distance of 1/32 on either side and 1/32 = .03125 inches. This is a very crude estimate and things may expand more considering that all the heat is generated right around this area. If we subtract the .03125 from, the .0008972 we get .022278 inches so we still have a bit of play.

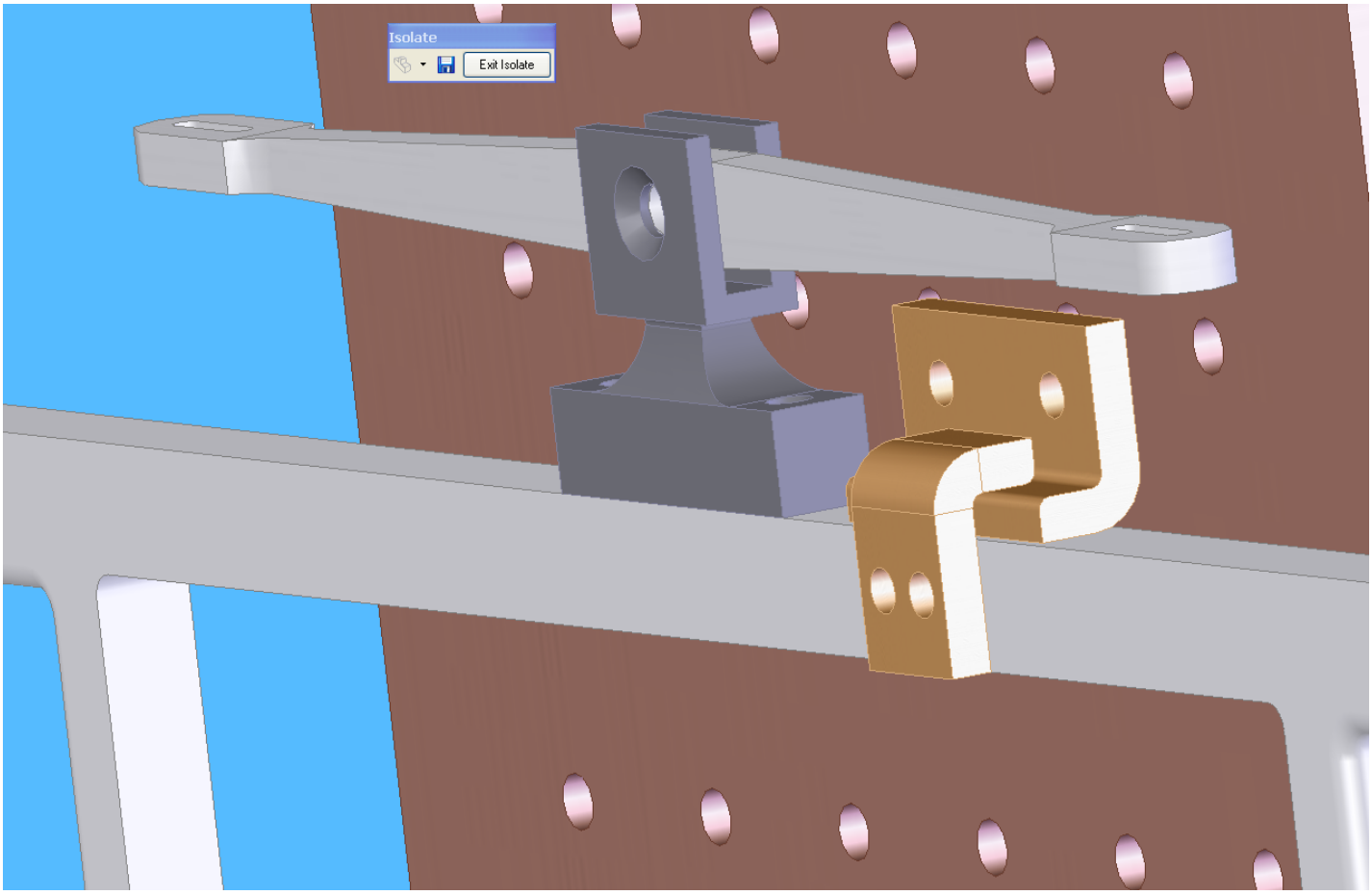

Figure 10: Anti-Lifting/ Expansion Brackets for the rear of the Boiler.

As you can see in figure 10 the brackets are in place, please note the rounded edges on the contact areas of the brackets. I made a 1/32 fillet on the edges to mate nicely with the 1/32 bend radius of the sheet metal, this way if things do expand more than thought there won't be a sharp edge biting into the radius of the other bracket, it will transition smoothly. I also checked to see if there was enough clearance between the cantilever bar for the springs and the bracket on the boiler. There is not much clearance there .0212 inches almost a 1/32 as figure 11 shows. Figure 12 shows the brackets as well as the relocated and redesigned Boiler Blow down vale in place.

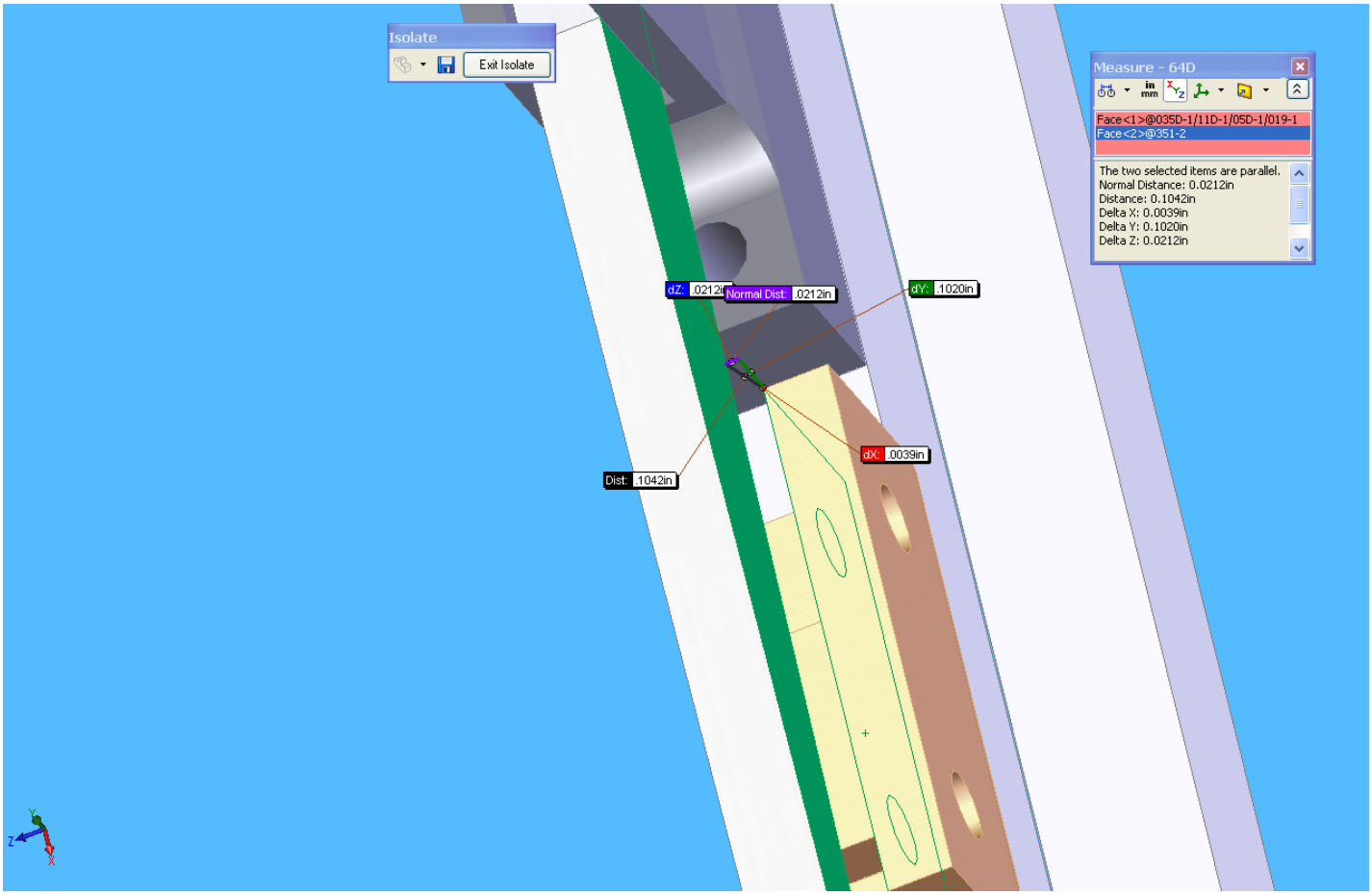

Figure 11: .0212 inches of clearance between the boiler bracket and the cantilever beam.

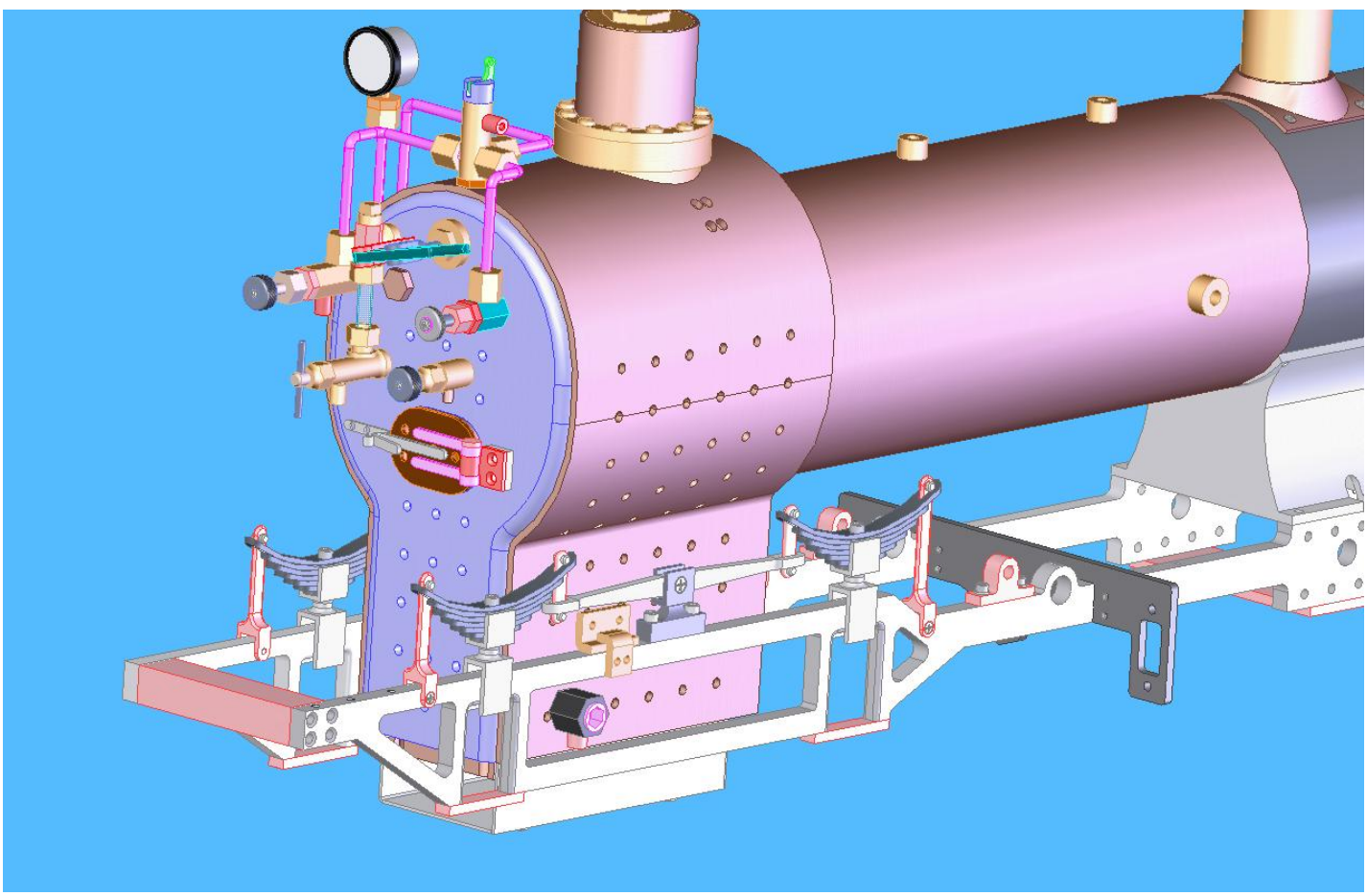

Figure 12: Anti-Lifting/Expansion Brackets and redesigned Boiler Blow-down Valve.

I am saving the pipe work for the next article, though as can be seen in figure 12, some of it had already been done. I am learning a new add-in to SolidWorks called Routing, and it must be set up just so to be used right. The pipes I had placed in before caused me major problems when I attempted to use it again. I am in the midst of learning how to, correctly set up design tables for different configurations of the compression fittings as well as the tubing to be used. This process is a bit complicated and one I am not very familiar with for now, I will be concentrating on configurations, top down design, the design library, and 3D sketching, not to mention connection points, routing points, and route properties to name just a few. I am positive with the help of u-tube and what I am sure will be a lot of trail and error, I can get the hang of routing.