LBSC's Wagon Top Boiler-Part II

by Don Althouse

10 June 2014

After getting the flanges all straightened out it was time to start working on the wraps for the Firebox. This was very easy to accomplish in SolidWorks as all I had to do was make a new assembly model with the two firebox plates placed at their given distances and aligned, then create a new part drawing within the assembly, convert the outline of the flange to my new drawing, then convert that line into a sheet metal part with the correct thickness of the material and type in a distance for the extrusion. A perfect fit not only for the Firebox but the Throat Wrap as well.

The Smoke-Box Tube Plate was basically done the same way except that I created a blank flanged plate first for the Barrel, inserted that into the assembly and then converted the circular lines for the flues from the Firebox Plate to the face of the new plate and then cut the holes. This ensured perfect concentricity between all the tube holes of each opposing flange.

I ran into a little problem with the lengths of the Tubes or Flues as they are called when inserting them into my assembly. I wound up being .093" or ~3/32" too short on the length. A 1/16 inch projection is required of the tube from each plate for soldering. From the longitudinal section of the boiler (Figure 1) we see the dimensions given for placement of various items including the tubes, flues, barrel and its associated plates, along with the gauge thickness of each respective plate. The math says the distance between the ends of the two tube plates is; (9) - (1/2) + 10G (1/8) + (1/4) + 13G (.093) = 8.968". Our tubes are 9 inches long, so this leaves .032" to be split between the two plates for a projection. .016 inches or ~1/64" is not enough for a projection so; 8.968 + 2(1/16) = 9.093 and there's my .093" that I was short.

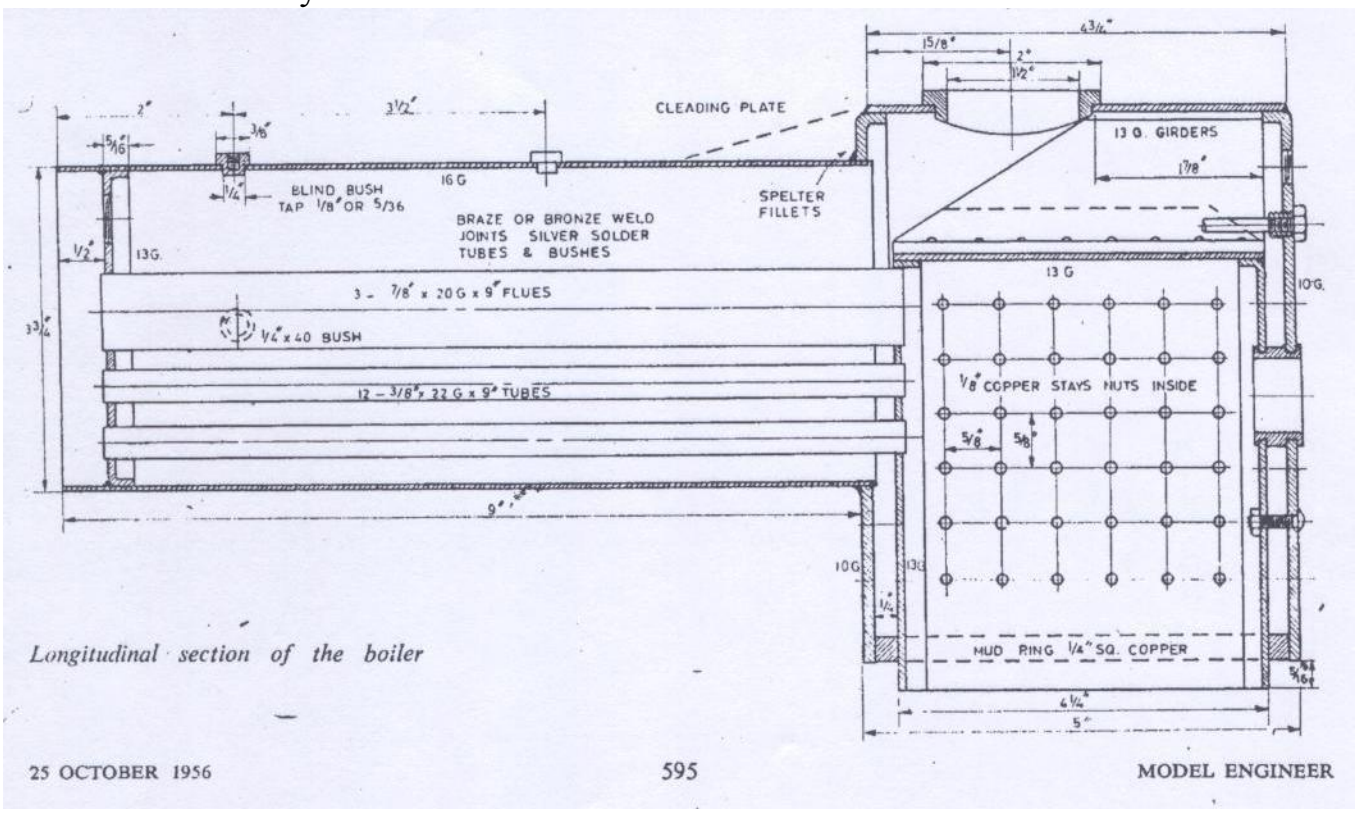

Figure 1: Longitudinal section of boiler.

Now of course with all that said one could just as easily push the Smoke Box Plate into the barrel about 3/32 of an inch further than 1/2 inch shown in the drawing. If I were to do this, it might affect other things that I haven't even run across yet, so I'll just extend the flues. Figure 2 shows a cross sectional view of the boiler thus far.

Putting in all those 1/8” stays could be a challenge, hopefully good sheet metal parts will be a successful key. I also elected not to put in weld beads or rivets, as this will use precious memory that my poor old computer system desperately needs.

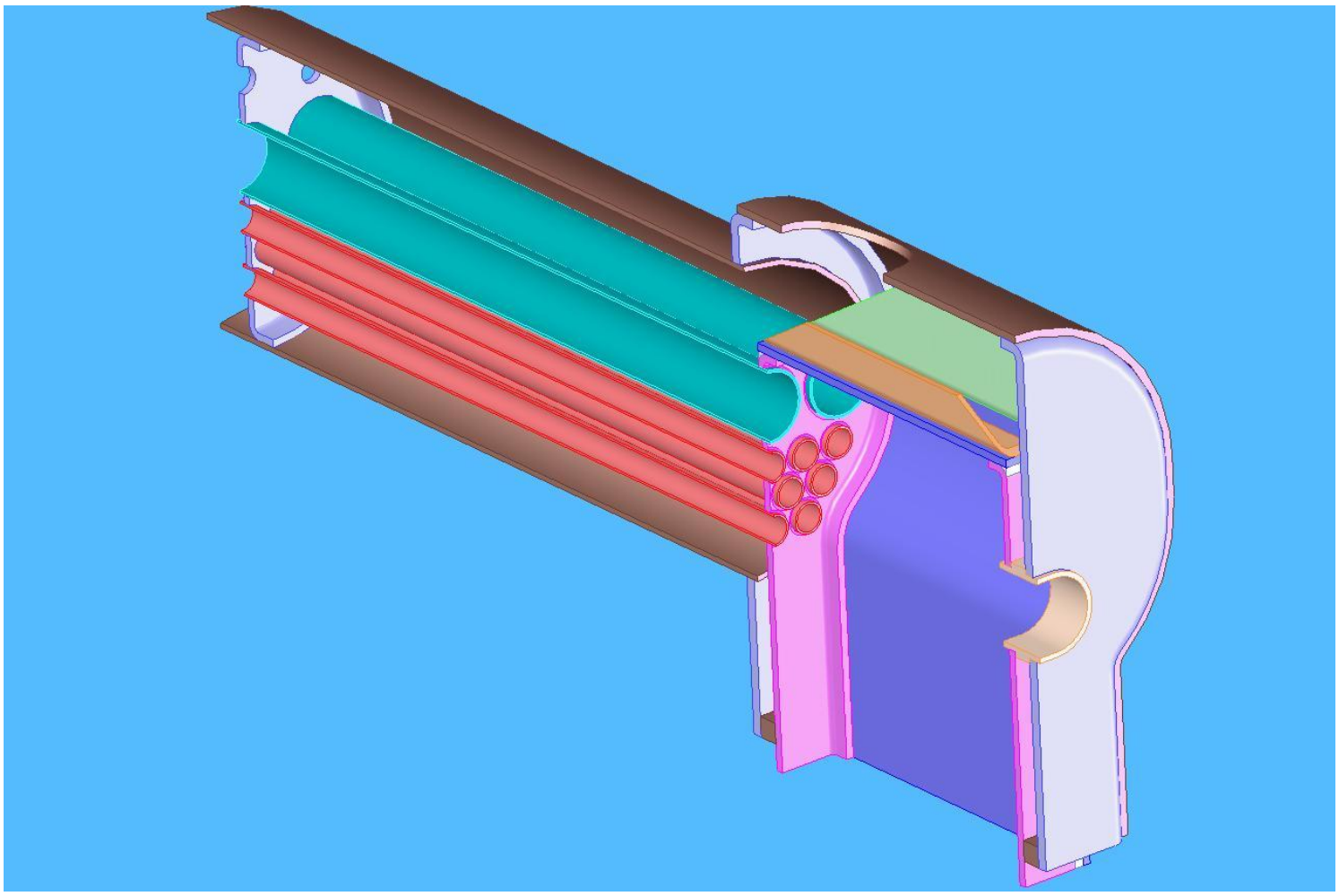

Figure 2; Front cross sectional view of the Boiler thus far.

The next step for the boiler was to make the Blower Valve/Stay assembly. I had no issues with creating the Blower Valve Body or the Union Nipple. But, while making the Stay Tube I did have a think about the thickness of the tube, 16 or 18 Gauge? I am not positive, but I don’t think copper tubing is sold in Gauge values anymore, all the information that I found for copper tubing was given with wall thickness(reference material was the Copper Tube Handbook, www.copper.org). The values for the 3/16 (.187) inch outside diameter tubing have a wall thickness of .03” which give me an inside diameter of .128” so this is what I will use. Again check your boiler codes to make sure this is adequate.

I did wind up changing the 1/4 - 40 threads to a 5/16 - 24, this is mainly due to the fact that my SolidWorks version does not have a 1/4 - 40 thread call out on the hole-wizard function. As can be seen in Figure 3, there is adequate wall thickness. I also decided to use a 1-64 screw with a washer to hold the knurled knob to the spindle. Length for the tube should be good since I checked the distance between the outside of the Smoke Box Plate and the inside of the Back Plate with LBSC’s measurement of 13-3/8 and I’m right on the money.

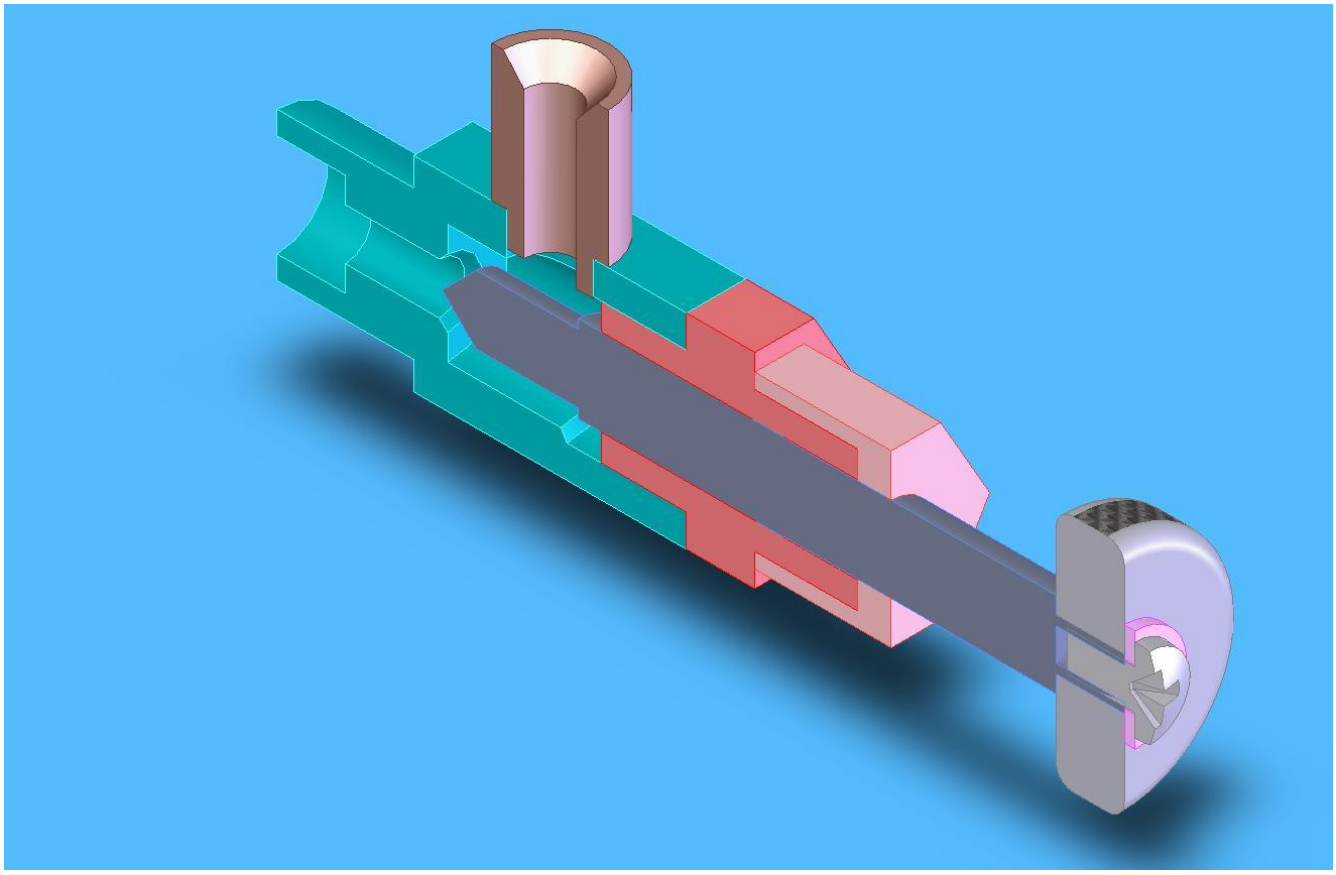

Figure 3; Front Sectional View of the Blower Valve Assembly

When I went to install the Stay/Blow Pipe Assembly I ran into a problem, one of my own making. When I had increased the size of the Fire-Box Flanges to accommodate the tube holes, I had also increased the height of the Fire-Box by a 1/8 of an inch. This caused interference between the upper crown stay and the Blow Pipe Tube. I had to move the two holes in Smoke-Box Tube Plate for the stays up 1/8 and right 9/64 so the pipe just barely cleared the Crown Stay see figure 4.

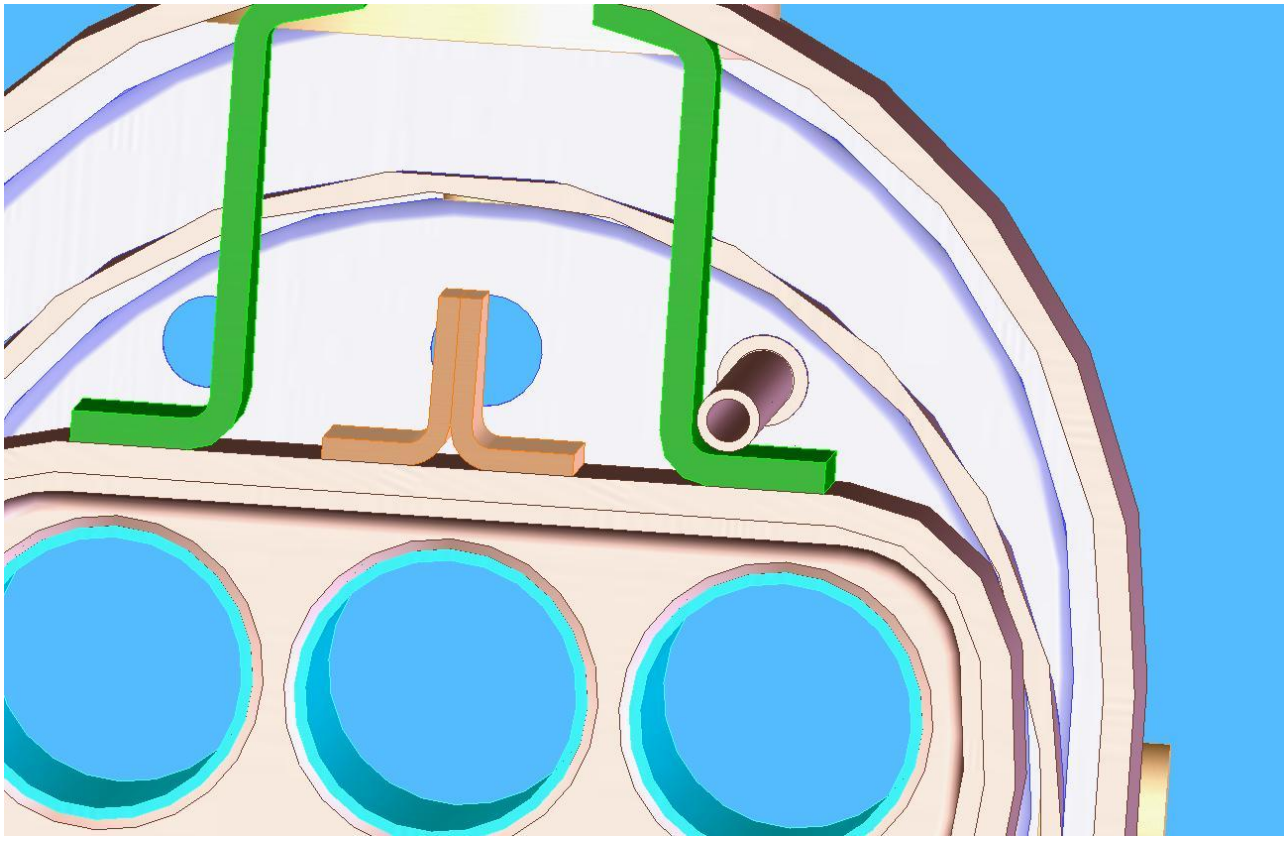

Figure 4: Clearance for the Stay/Blow Pipe and Crown Stay.

In looking at figure 4, I am hoping there is enough room for the throttle linkage; I may have to cut down those center stays heights on top of the firebox from ½ to ¼ inch. Another thought just crossed my mind, prior to working on the boiler a friend of mine gave me a heads up about his boiler interfering with the suspension, perhaps now might be a good time to see if the boiler fits before I get to much more involved.

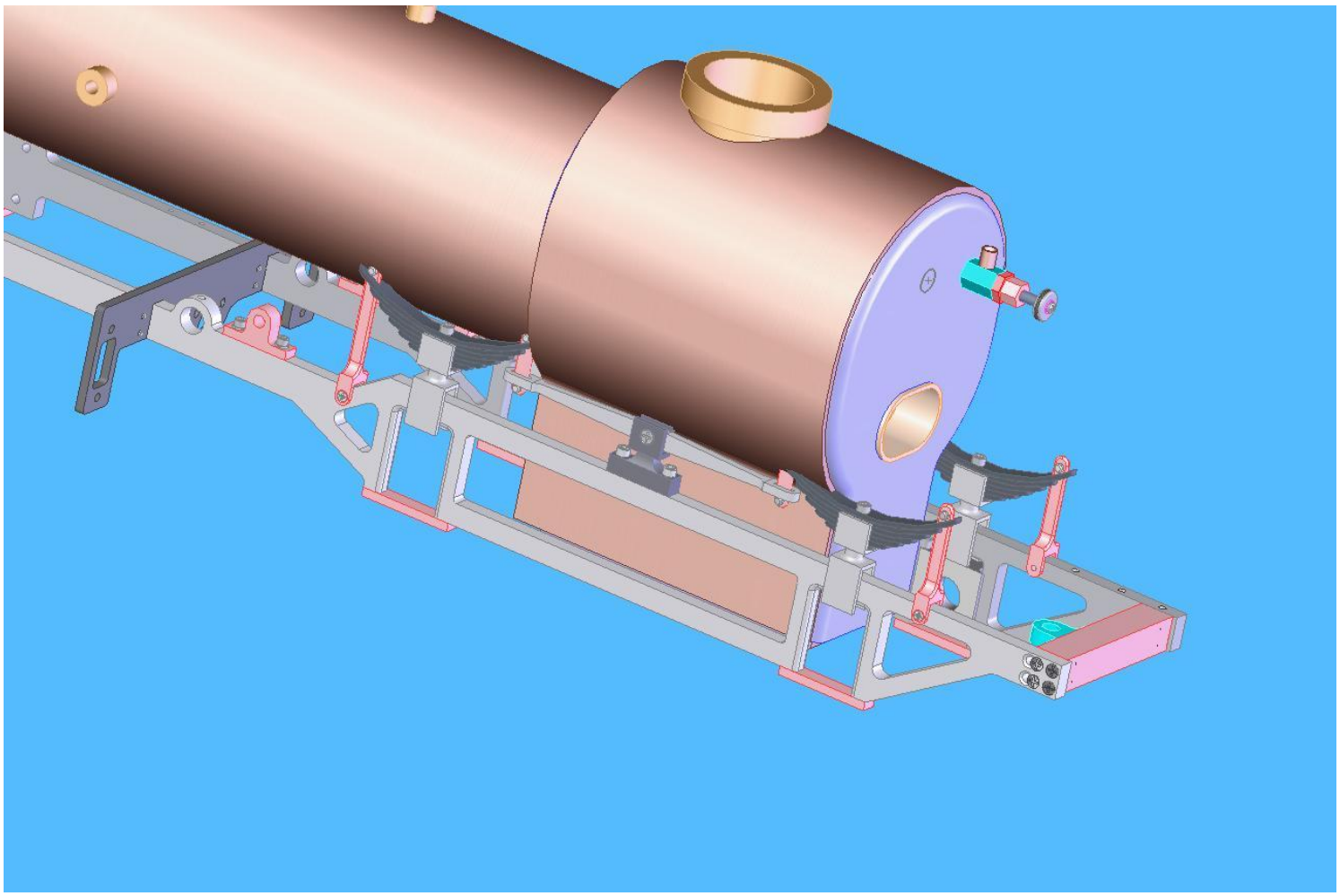

Figure 5: Major Boiler interference with the Suspension.

As I was warned about, there are major interferences between the boiler and the suspension as can be seen in Figure 5. I will have to extend the lower part of the boiler to accommodate this error. In my first go round with extending the boiler I extended the lower part of the flanges and the wraps by 1/2 inch, this was not enough as I still had an interference with one of the rivets of the suspension and the lower round part of the of the wrap for the Throat Plate.

Also, now that I think about it I will have to include another 1/8 of inch for the suspension travel. As it is now I have my axel slides at dead center of their travel. A 3/4 inch total raise should be enough to give good clearance for full travel of the suspension and not have any interference's, also note I will be raising the center of gravity of the locomotive by doing this.

As can be seen in Figure 6 there is now ample clearance for the suspension and its travel. I did wind up raising the boiler by a total of 3/4 ". This was a relatively easy thing to do in SolidWorks; all I had to do was to increase the length of the bottom part of the flanges and then of course do the same for the wraps. When I ran interference detection for the Boiler in SolidWorks I got a warning about the Crown Stays, oops I forgot about those, Thanks again SW.

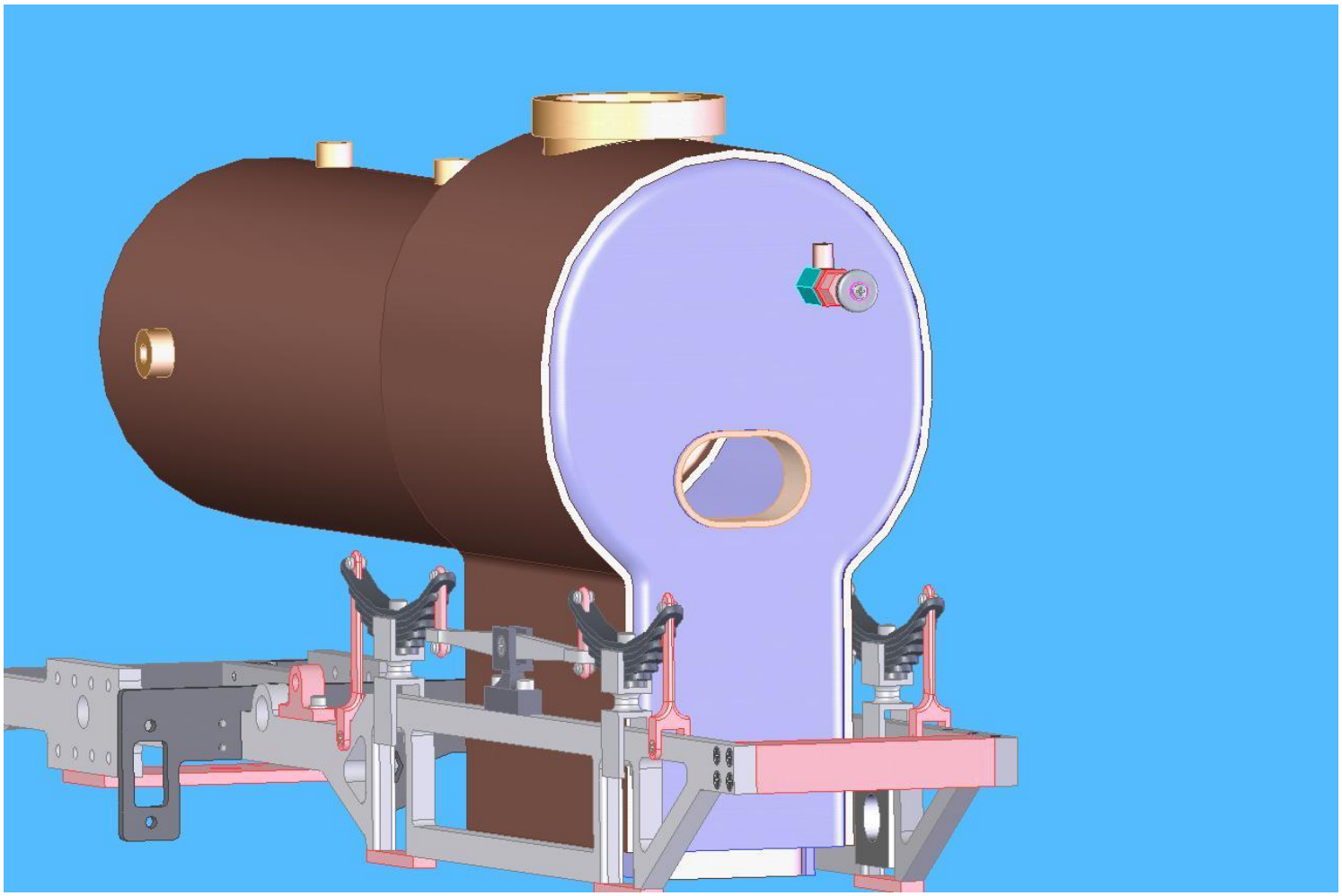

Figure 6: Boiler with ample clearance for the suspension

Putting in the Wrap Stays is not an easy task with my version of SolidWorks. At First I tried putting all the holes in with the Wraps unfolded, but could not get proper hole alignment between the two wraps. Next I thought about just drilling the holes with the Wraps formed, but SolidWorks does not allow you to do this on a curved surface, I suppose I could have made lots of Tangent planes though and tried that, but I'm not sure if the part will unfold afterward. Then I tried the hole-series function, no luck there as well, I believe this is due to the fact that the hole gets elongated after the bending function: IE, its elliptical not circular.

What I finally wound up doing was to place all the holes in the flattened out drawing of the Throat Wrap, then re-bend it to my specs, then place the formed fire-box (no holes for the Stays) inside of that at the proper distances. The holes in the Throat Plate Wrap gave me locations to place the screws in with Tangent mates. I was able to pattern the lower flat parts of the wrap easily but could only pattern one row at a time on the curved surface. After doing one half of the wrap I simply mirrored the rest to the other side about the Front Plane.

There has got to be an easier way to do this as well as more accurate and if anyone knows, please enlighten me. Later versions of SolidWorks may have better functions in the sheet-metal program that address this that I am not aware of, or I could just be ignorant of the way the Sheet-Metal program works with my version.

After getting all the stays in I checked the size of the assembly model and it was more than double from when I started. Needless to say this will be the last you see of the Wrap Stays in my model, I am taking them out to save memory. Figure's 7 & 8 show the placement of the Stays so you can get an idea of how they go in.

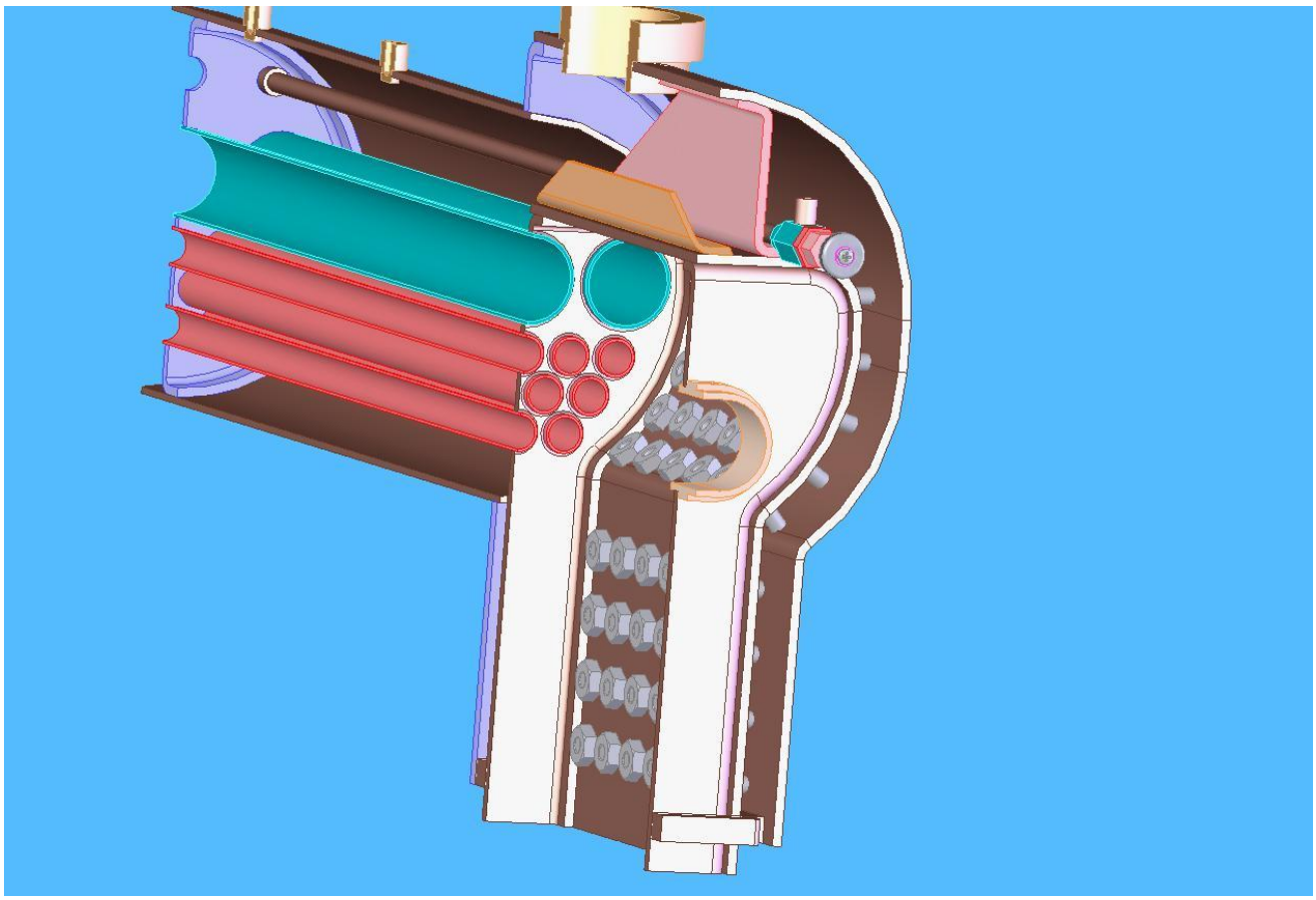

Figure 7: Front Section View showing internal Stays, 8-32 screws (Copper) with single chamfer nuts (Brass).

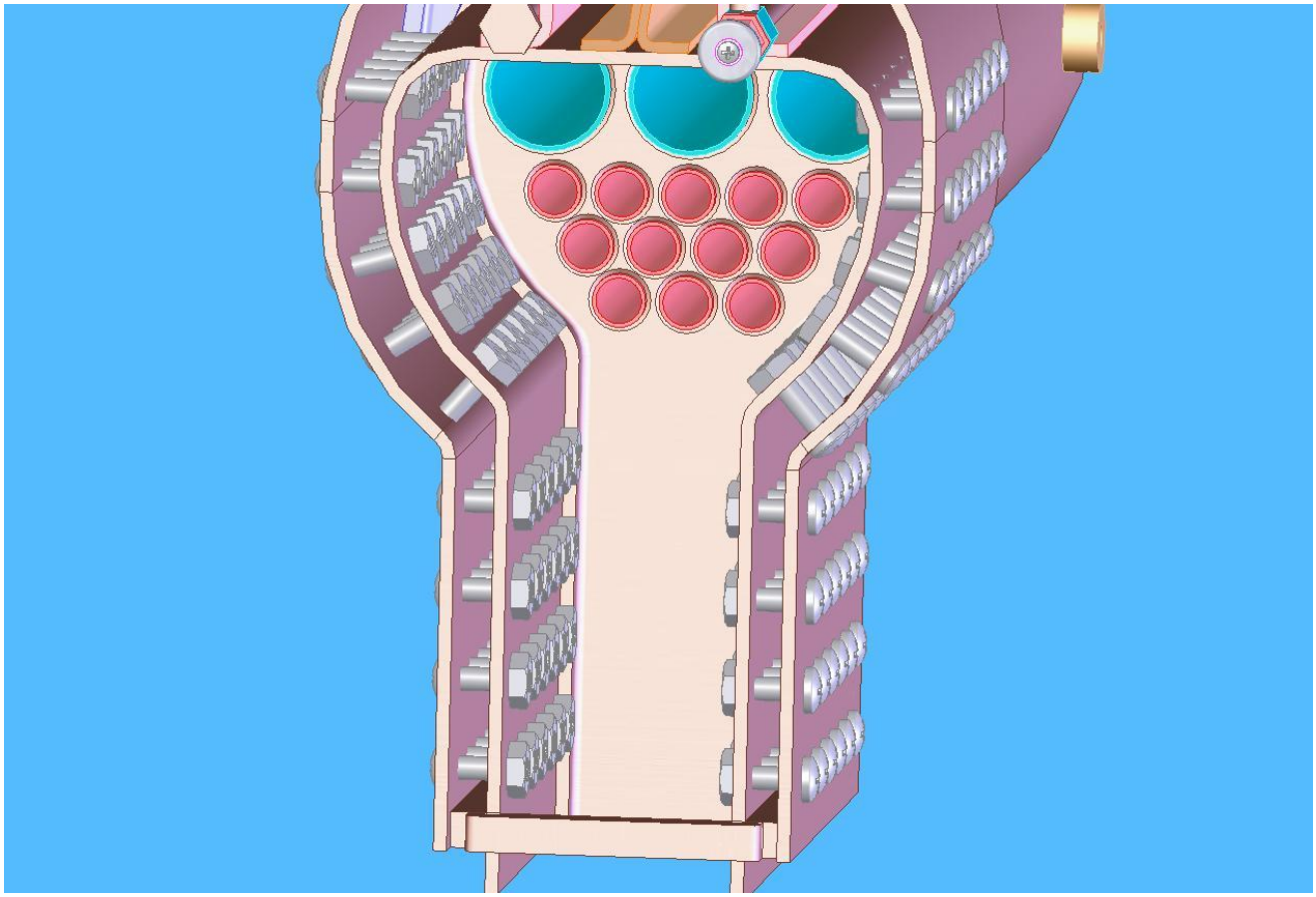

Figure 8: Internal view of Boiler Stays with Throat and Firebox End Flanges removed.

The Last thing to be completed for this series was the Dome Assembly, very straight forward and easy to accomplish. Figure 9 shows the Lower Dome assembled to the boiler with 4-48 Brass screws. Next up will be the Smoke Box.

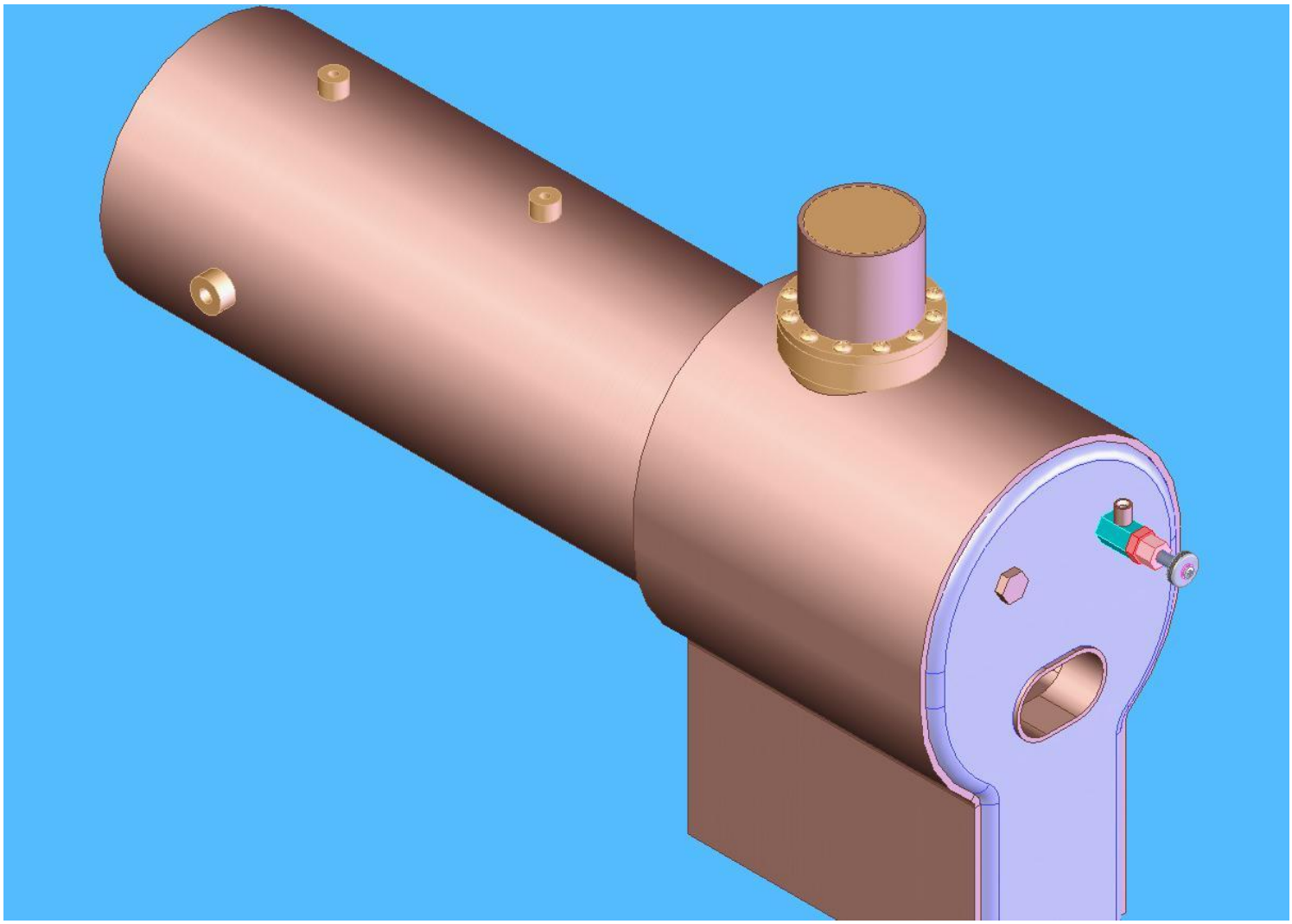

Figure 9: Lower Dome Assembly attached to Boiler with Brass screws.