LBSC'S WAGON TOP BOILER, Firebox and Throat Plates

Where do I begin? I started of course with where the article starts, which was with the Boiler Barrel. 16 gauge (.0647" thick) seamless copper tube with an outside diameter of 3-3/4" and a length of 9-3/16 ", easy, BAM, done. Then I got to the Throat-Plate and Fire-Box ends……..

LBSC writes that two forming plates will be needed for the throat-plate, back-head and the ends of the firebox. Let's start there, with the throat plate and the drawings for the forms.

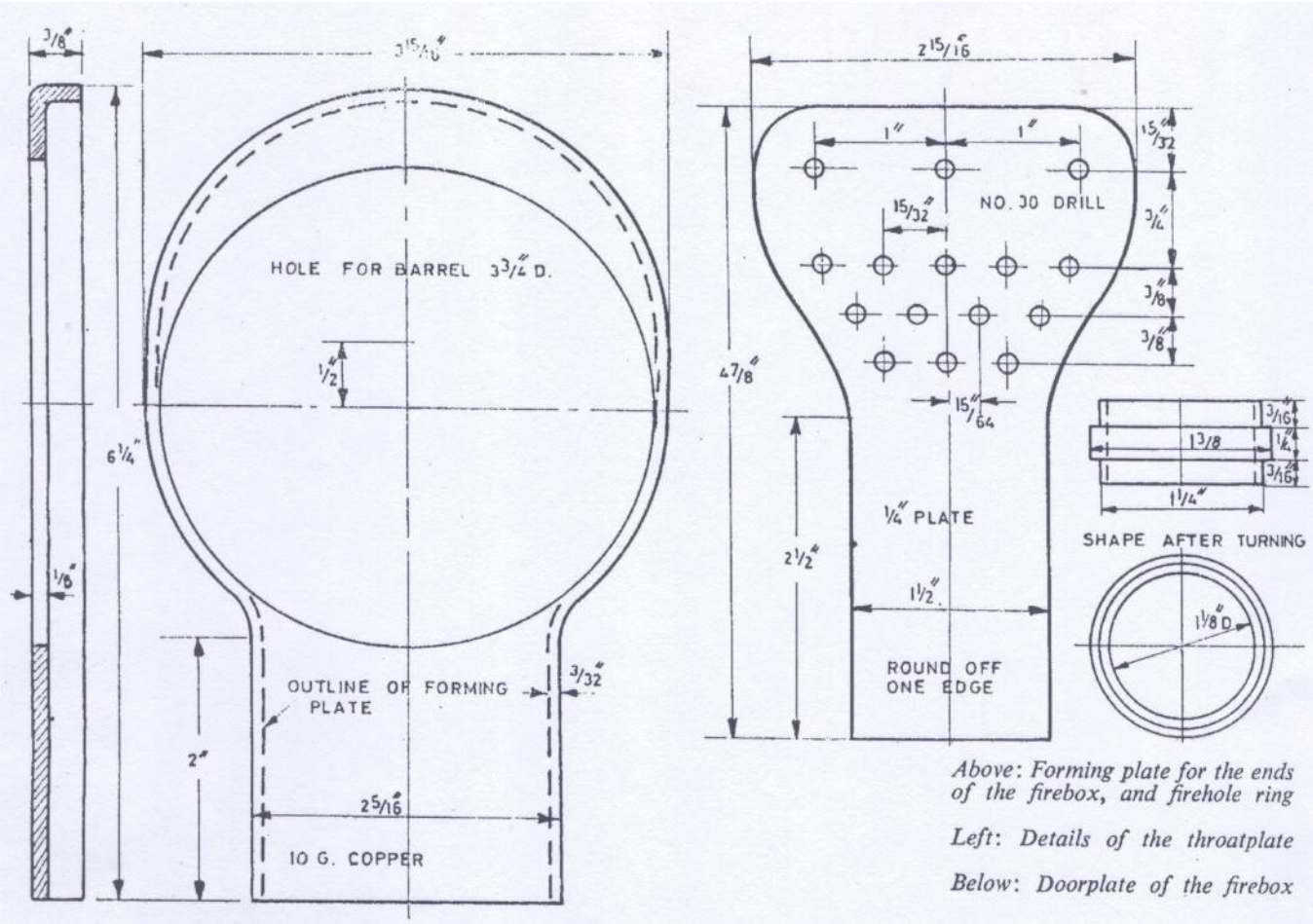

Figure 1; Firebox and Throat Plate drawings with finished dimensions for the Throat Plate.

As we see on the left of Figure 1, there is a drawing for what appears to me to be a combination of the forming plate and the finished dimensions of the Throat-Plate. 10 Gauge Copper Sheet has a thickness of .125" so I have no big problem with the sectioned view there on the extreme left and the final dimensions. However, in the front view of the Throat-Plate we see the dashed line for the "Outline of Forming Plate", and the distance from the forming plate to what I believe is the finished dimension (2-5/16) is 3/32" on either side of the forming plate making the forming plate 2-1/8" wide at the bottom. The math would suggest that the forming plate plus the thickness of the sheet on either side of the forming plate would be; 2-1/8 + 2(.125) = 2-3/8" which is a 1/16" bigger than the finished dimension there. Before I get more into this, let me look at something else first.

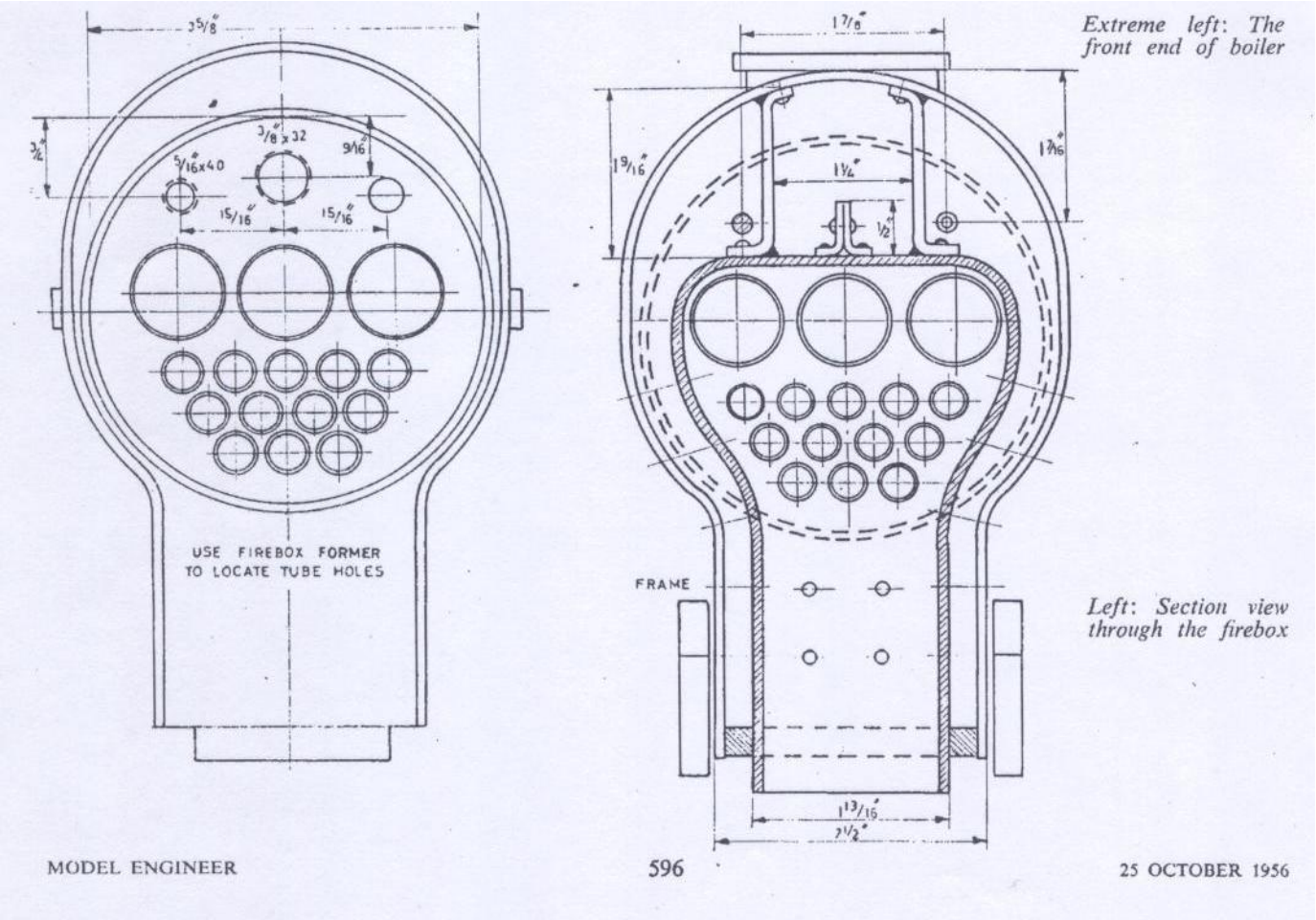

Figure 2; Front end of Boiler and Sectional view through the Firebox

The barrel was made from 16 Gauge (.0647”) wall thickness Copper Tube with an outside diameter of 3-3/4” which would mean the inside diameter of said tube should be 3.75 – 2(.0647) = 3.6206” the extreme left drawing of Figure 2 shows the finished dimensions of the Back-Head Plate as 3-5/8” or 3.625”. This will probably be adequate in the real world but not in mine. I will have to adjust the diameter of said plate to correspond with the true inside diameter of the barrel or SolidWorks will give me an interference error when I ask it to check for interferences within the assembly.

As I mentioned before when I was looking at the outline of the Throat Forming Plate in Figure 1 and its associated dimensions, I was wondering about the 3/32” and the 2-1/8” dimension of the Forming Plate.

After creating a model to the specified finished dim’s and throwing in a modest 1/16” inside bend radius for the flange, I noticed right off the bat that the 3-3/4” hole for the barrel cut directly into the flanges on both sides of the formed copper sheet. The outside circular finished dimension at the top of the forming plate is 3-15/16”. The hole for the barrel is 3-3/4” and machined on the centerline of the part.

We calculate 3-15/16 – 3-3/4 = 3/16” but our material thickness is 1/8”. This means that the inside flange diameter is 3-15/16 – 2(1/8) = 3-11/16”. 3-3/4 – 3-11/16 = 1/16”. There is clearly interference here of 1/32” on either side of the flange which is exactly what my model shows. In Figure 3 you can see where the flange material gets thinner by the ensuing cut of the barrel.

SolidWorks is a fairly comprehensive program for creating sheet metal parts. When I went to flatten the model so I could make a flat pattern drawing, SolidWorks gave me an error which said “This bend has a cut that creates a beveled edge, it cannot be handled”. I believe the reason for this is due to the fact that the hole for the barrel interferes with the radius of the inside flange bend.

From what it looks like to me in Figure 3 is that the **“Design Intent”** here was to use the flange as part of the support for the barrel, not a bad idea. I will incorporate this in the re-design.

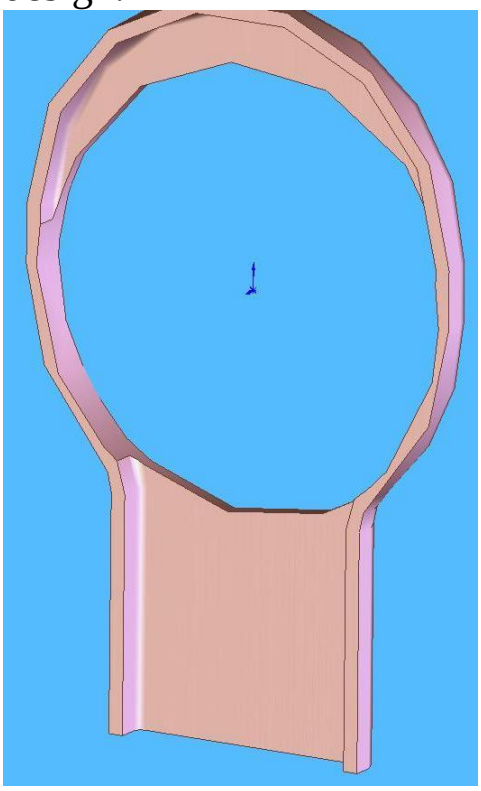

Figure 3: Throat Plate per LBSC

To keep with what I consider the design intent and not cut into the flange with the barrel hole, I had to modify the finished outside circular dimension at the top of the Throat Plate from 3-15/16 to 4.00 inches. I also used a very modest 1/16 (.0625) radius for the flange bend on the inside, the outside bend radius being 3/16 (1/16 + Material Thickness 1/8) and I held the 2-5/16 finished dimension at the bottom as well as the 6-1/4” height, Figure 4.

Interestingly enough when I went to make a flat pattern of the re-designed plate with the hole for the barrel, I got a new error that said “This part contains features that cannot be unbent”. Hmmmmmm.

From there I decided to see what would happen if there were no barrel hole. The plate with no hole flattened perfectly.

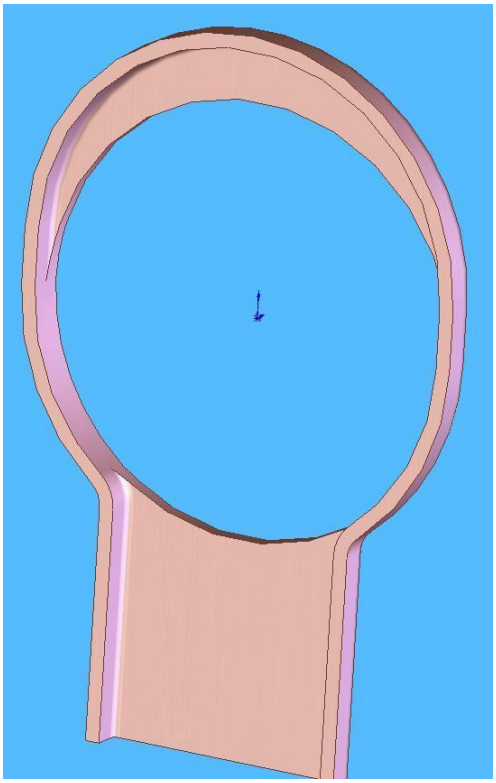

OK SolidWorks, What are you trying to tell me? Now I'm not a sheet metal expert but it appears to me that if one were to go about making this part they would have to bend the sheet metal first and then cut the Barrel hole. If the reverse were tried, I.E cutting the Barrel hole at the flat pattern stage, you would not have and edge to make the bend for the flange where the hole is concerned. I think this is why I was getting the errors and it makes sense. SolidWorks had no edge to make the bend; therefore it could not unfold the model. I had not given this the slightest bit of thought, but SolidWorks did. Thanks Software.

Let's take this one step further and create a flat pattern drawing of the Throat Plate with no Barrel hole and see where the bend lines are in relation to the Barrel hole.

Figure 4: Redesigned Throat Plate

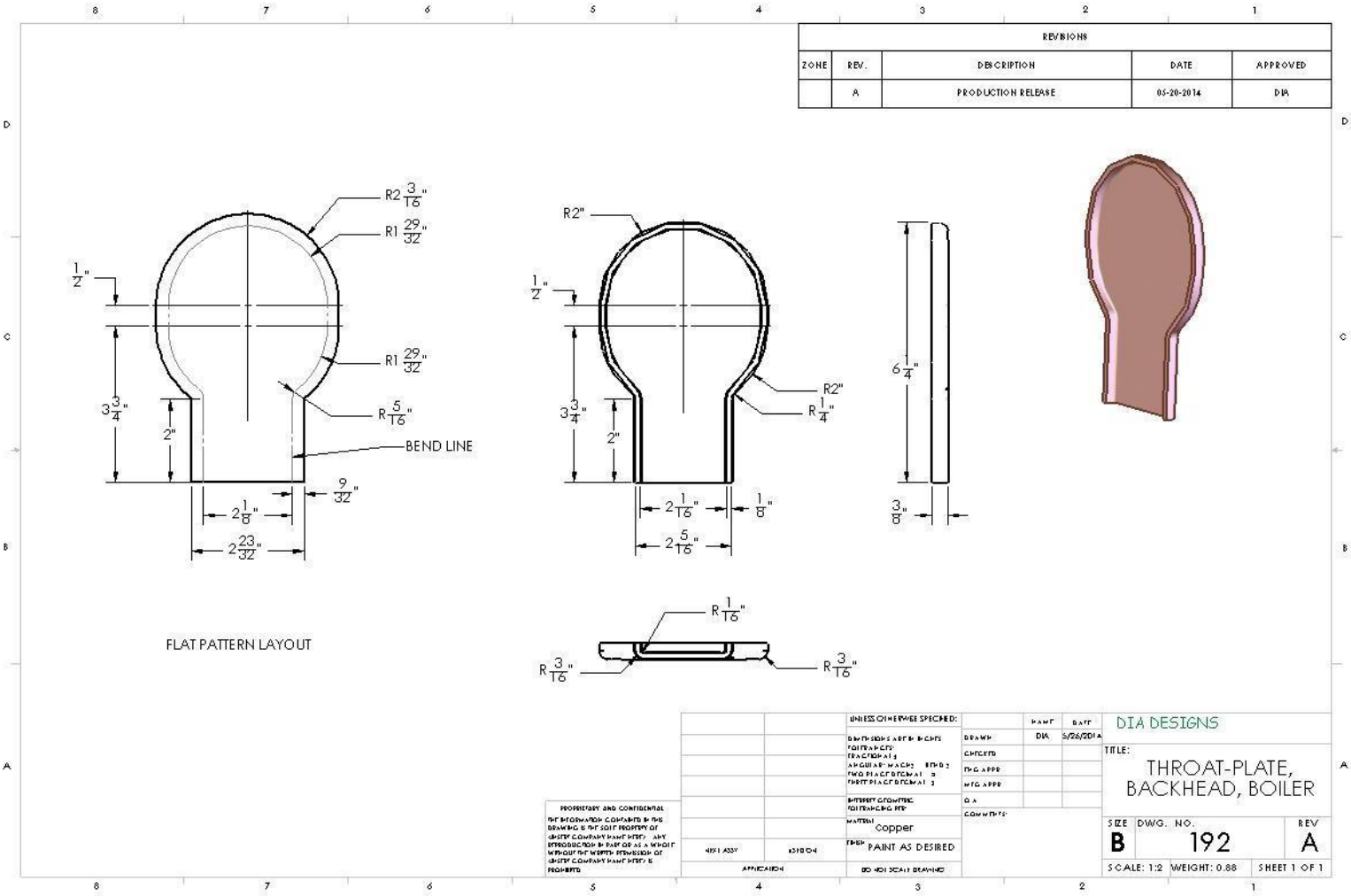

Figure 5; Flat Pattern & Final Dimensions drawing for Throat Plate

Figure 5 shows the Throat Plate drawing I created from the model. To the very left in the drawing is the flat pattern layout. The radius of the bend line for the flange around the barrel hole is 1-29/32”, the radius for the barrel hole is 3-3/4 divided by 2 which is 1-7/8 or 1- 28/32”. Is 1/32” enough of an edge to create a bend that has a 1/16” radius?

As can also be seen in the flat pattern drawing there is a dimension between the bend lines at the bottom that reads 2-1/8”. As I mentioned before back in Figure 1, LBSC has this dimension as the “outline of the forming plate”. I believe this 2-1/8” dimension to be a bend line dimension, not an actual dimension of the size of the plate. If we look at the dimension on the formed plate, we see a dimension of only 2-1/16 between the flanges.

With all that said, I ran into similar issues with one of the Firebox Ends. I tried to hold to the dimensions specified but could not do so. The main issue that I ran into was that the tube holes were interfering with the flange radius and when I went to flatten the part SolidWorks gave me an error that said “This bend has a cut that creates a beveled edge, it cannot be handled”. Same thing as before, so I had to modify the finished dimensions (Shown in figure 6) at the top of the Firebox Plate from 3-1/16 to 3-1/4 inches and I also had to increase the height from 4-7/8 to 5 inches. I was able to hold the 1-5/8 dimension at the bottom.

In addition to this I had to modify the two upper hole locations. The dimensions for the hole locations given in Figure 1 are for the forming plate only, not the finished plate. They are only dimensioned from the center in the horizontal direction not the vertical. Figure 7 shows the modified flat pattern and finished dimension drawing for formed plate with the tube holes.

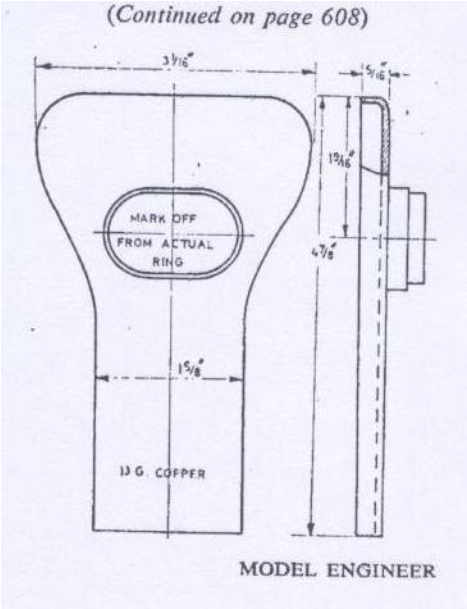

Figure 6; Firebox finished dimensions

As can be seen in the flat pattern drawing of Figure 7, I came very close to getting the 1-1/2 dimension of LBSC’s forming plate at the bottom, missed it by 1/64. However, note the dimensions at the bottom of the formed plate. The inside dimension between the flanges is 1-7/16 with the outside dimension holding at 1-5/8.

I guess my bottom line to this whole thing is to be careful when forming sheet metal; bend radii for the flanges need to be accounted for. LBSC never specified a bend radius that I could find; he only mentioned rounding the edge on one side of the plate. A friend of mine also wrote to me and noted that there are Boiler codes to be aware of today.

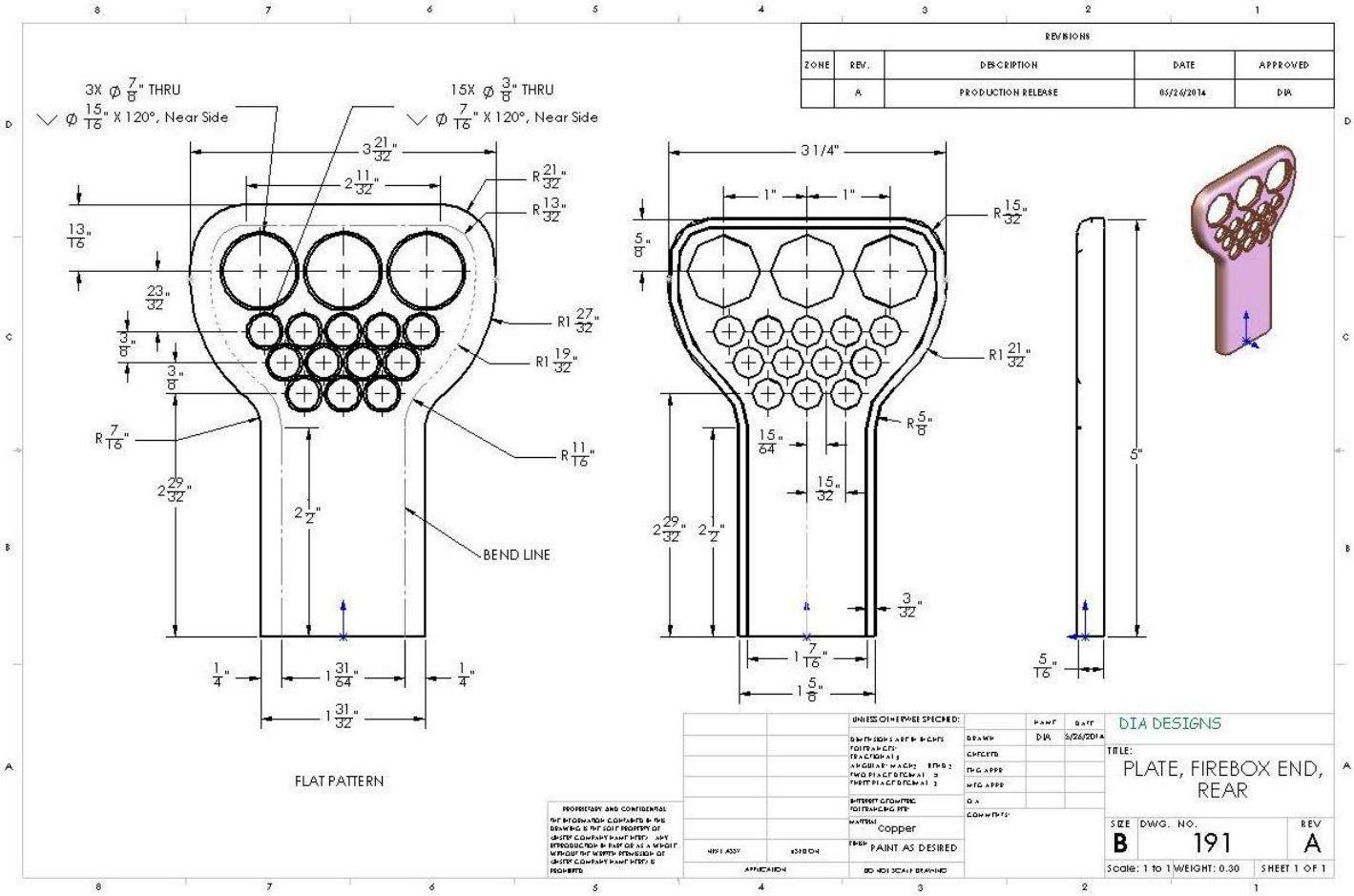

Figure 7; Revised Firebox. Left side, Flat Pattern drawing. Right side, finished dimension drawing.

His code specified a flange radius of 3 times the thickness of the material. So take your time here, check your dimensions and applicable codes. Copper is expensive!